lafonte.eu®

Since 1975 processing Corrosive Solutions

www.lafonte.eu

lafonte.eu®

INDEX

MAGNETIC DRIVE PUMPS

EVT 4 4
EVT 7 6
EVT 12 8
EVT 15 10
EVT 20 12
EVT 25 14
EVT 30 16
MPA 23/11 - MPA 41/31 18
MPA 320 20
MPC 042 - MPP 031 22
MPP 051 - MPP 052 24
MPP 101 - MPP 201 26
MPP 251 - MPP 302 28
MPP 500 - MPP 501 30
MPP 831 - MPP 951 32

MECHANICAL SEAL PUMPS

EVM 8 36
EVM 12 38
EVM 15 40
EVM 20 42
EVM 25 44
EVM 30 46
03 48
04 50

VERTICAL PUMPS

EVV 8 54
EVV 12 56
EVV 15 58
EVV 20 60
EVV 25 62
EVV 30 64
EVV 35 66
EVV 40 68
EVV 45 70
V3 72
V4 74
EASY P-B 76
EASY P-N 78

DIAPHRAGM PUMPS

CU 15 82
MCB - BX 05 84
BX 09 - BX 10 86
BX 15 - BX26 88
BX 50 - BX 51 90

DRUM PUMPS

FL 94
PF 27 - PF 40 - PF 48 96
TO 27-9 - TO 29-12 98

FILTRATION SYSTEMS

MINI I-N 102
MINI G-P 104
MIX 2.0 3 106
MIX 2.0 7 108
MIX 2.0 12 110
MIX 2.0 15 112
SLIM 2.0 3 114
SLIM 2.0 7 116
TOP 24 118
BIG 2.0 120
BIG D 2.0 122
BFP D 124
CFB-TOP 126
CFB-SIDE 128
GH 130
FLEX 3 - 7 - 12 132
EASY F1500 - 2000 - 4000 - 5000 135
COMPACT BFP 137
POMPE VERTICALI CS 138
ASTERIX 140

METAL RECOVERY SYSTEMS

REM 144
REM SMALL 146
REM STAND ALONE 148
MFR 150
UNDER SINK 152

PURIFICATION SYSTEMS

DEPUR 156
SELECROM 158
DISOIL 160
IDRO-RO 162
ECO-RO 164
M SERIES 165

FILTER ELEMETS AND CONSUMABLES

PURE FLOW 168
CCA 170
CPP 172
CMB 173
BAG FILTER 175
SFL 176
DFC-FILTER PAPERS 178
FILTER CARTRIDGES - WP 179
JUMBO 180

ACCESSORIES

GRIGLIATI 185
EQX 51 186
EQX 100 188
EQX 200 190
EQX 302 192
EQX 303 194

Since 1975 processing Corrosive Solutions

lafonte.eu®

Magnetic drive PUMPS

lafonte.eu

evt 4

MAGNETIC DRIVE PUMP

ADVANTAGES

- Temporary dry-run capability with carbon impeller bearing
- Energy saving

FEATURES

- Seal less magnetic drive coupling
- Tmax exercise: PP 80°C - PVDF 98°C
- Connections:
  - socket union for rigid piping connection with PP, PVC, PVDF union ends choice
  - hose barb for hose connetcions
  - flanged

APPLICATION FIELDS

- Acid and alkaline soutions with minimal solid sospended particles
- Electroplating industry
- Chemical industry
- PCB industry

SPECIFICATIONS

	Flow Rate max (l/min.)	Head max (m)	Motor (kw)	IN/OUT D (mm)	T max (°C)	Weight* (kg)
50 Hz	57	8	0,12	25 x 25	PP: 80	PP: 3,6
60 Hz	58	9	0,12	25 x 25	PVDF: 98	PVDF: 4,0

* It depends on the motor

CONNECTION TYPE B

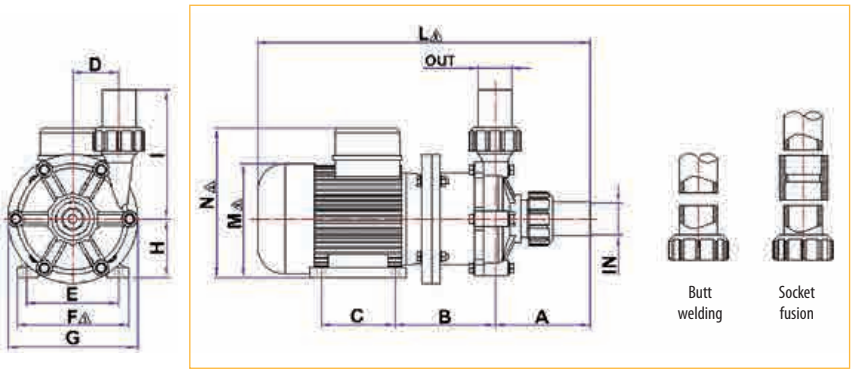

CONNECTION TYPE P

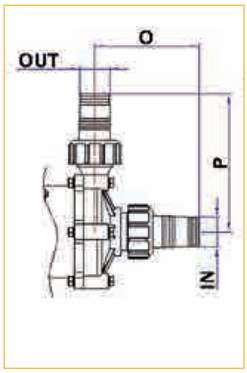

CONNECTION TYPE F

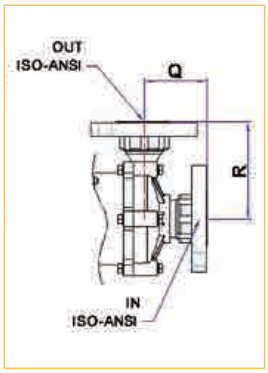

Dimensions:

Mod.	A	B	C	D	E	F⚠	G	H	I	L⚠	M⚠	N⚠	O	P	Q	R	IN	OUT
EVT4	68,5	103,0	71	35	90	112	110	56	105	304	110	150	90,5	127	53,5	90	25	25

⚠ It changes according with motor supplier

PUMP IDENTIFICATION							
Model	Pump Body Mat.	Impeller Mat.	Shaft Mat.	Impeller Bush Mat.	O-Ring	Connection Type	Motor / rpm
EVT 4	P = PP F = PVDF E = ECTFE	P = PP F = PVDF E = ECTFE	C = Ceramic S = SIC	T = PTFE G = Carbon	E = EPDM V = Viton	B = Socket Union F = Flanged P = Hose barb	A = 50 Hz / 2800 B = 60 Hz / 3400
EVT 4	**P**	**P**	**C**	**G**	**E**	**B**	**A**

EVT - Pumps have dry run accidentally capability when equipped with carbon impeller bearing

Performance Curve 50 Hz - Rpm: 2800

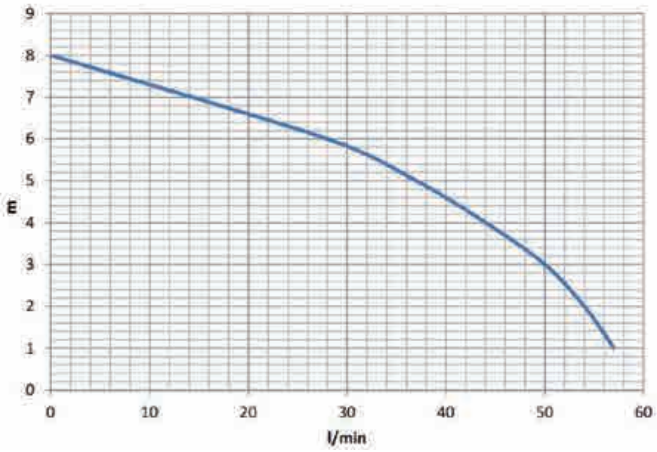

Performance Curve 60 Hz - Rpm: 3400

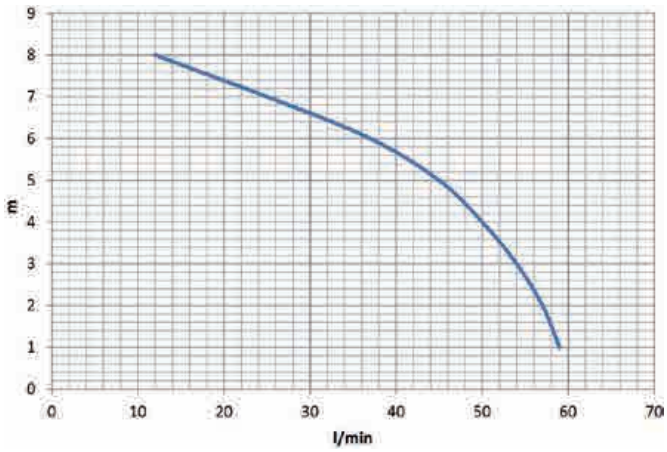

Curves referr to water T = 20°C

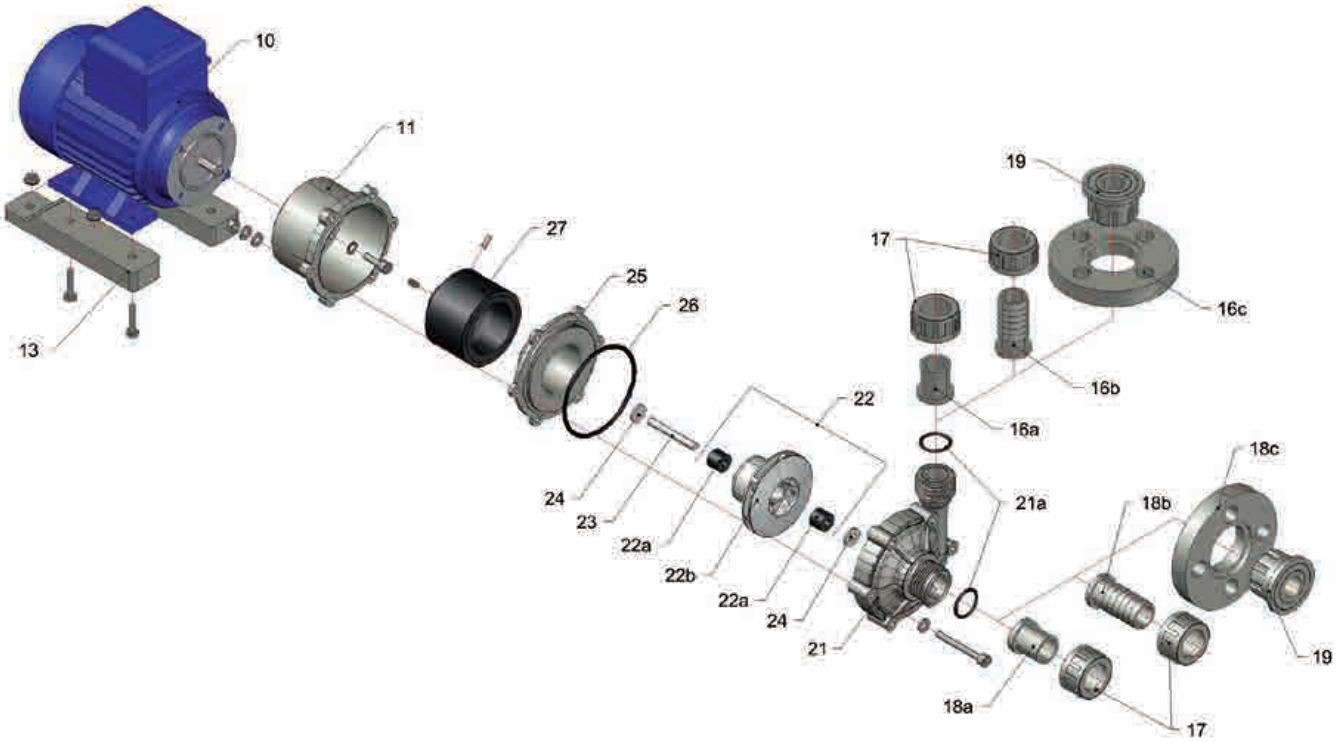

10	Motor	17	Discharge Nut	21a	IN/OUT pump housing ORings	25	Rear casing
11	Bracket	18a	Suction union end	22	Impeller assembly	26	Pump housing ORing
13	Plastic Pump feet	18b	Suction hosebarb	22a	impeller bushes	27	Drive magnet
16a	Discharge union end	18c	Suction flange	22b	Impeller magnet		
16b	Discharge hosebarb	19	Flange Adpater	23	Shaft		
16c	Discharge flange	21	Pump housing	24	Thrust Ring couple		

LAFONTE.EU srl may modify data any time, without notice, in order to get product enhancement

lafonte.eu

evt 7

MAGNETIC DRIVE PUMPS

ADVANTAGES

- Accidentally dry run capability with carbon impeller bearing
- Energy saving

FEATURES

- Seal less magnetic drive coupling
- Tmax exercise: PP 80°C - PVDF 98°C
- Connections:
  - socket union for rigid piping connection with PP, PVC, PVDF union ends choice
  - hose barb for hose connetcions
  - flanged

APPLICATION FIELDS

- Acid and alkaline soutions with minimal solid sospended particles
- Electroplating, Chemical and PCB industry

SPECIFICATIONS

	Flow Rate max (l/min.)	Head max (m)	Motor (kw)	IN/OUT D (mm)	T max (°C)	Weight* (kg)
50 Hz	112	10	0,25	32 x 32	PP: 80	PP: 6,00
60 Hz	121	12	0,37	32 x 32	PVDF: 98	PVDF: 7,00

* It depends on the motor

CONNECTION TYPE B

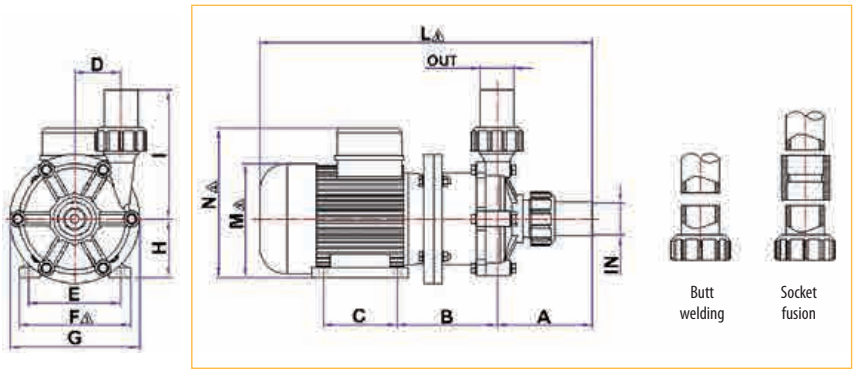

CONNECTION TYPE P

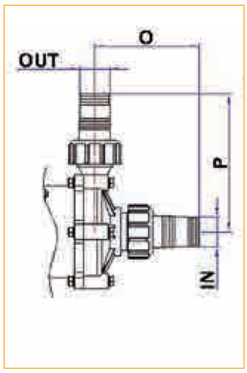

CONNECTION TYPE F

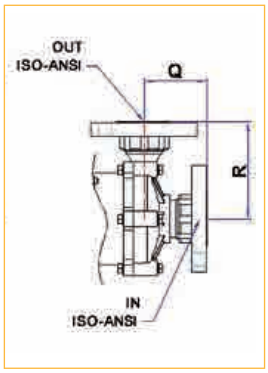

Dimensions:

Mod.	A	B	C	D	E	F⚠	G	H	I	L⚠	M⚠	N⚠	O	P	Q	R	IN	OUT
EVT7	88,0	108,5	80	50	100	120	140	63	125	345	120	162	113,0	150	68,0	105	32	32

⚠ It changes according with motor supplier

PUMP IDENTIFICATION							
Model	Pump body	Impeller	Shaft	Impeller bearing	O-Ring	Connections	Motor / rpm
EVT 7	P = PP F = PVDF	P = PP F = PVDF	C = Ceramic	T = PTFE G = Carbon C = Ceramic	E = EPDM V = Viton	B = Socket union P = Hosebarb	A = 50 Hz / 2800 B = 60 Hz / 3400
EVT 7	**P**	**P**	**C**	**G**	**E**	**B**	**A**

EVT - Pumps have dry run accidentally capability when equipped with carbon impeller bearing

Performance Curve 50 Hz - Rpm 2800

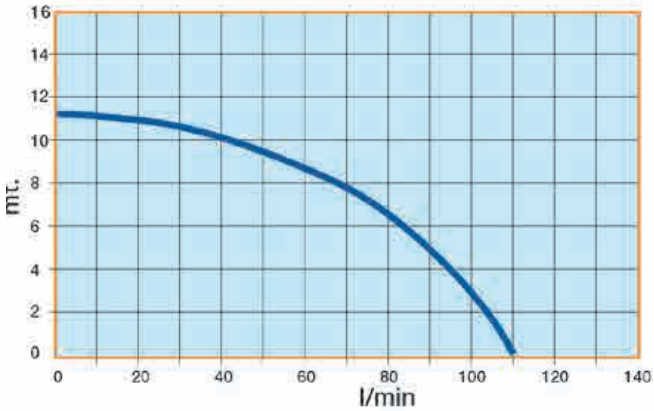

Performance Curve 60 Hz - Rpm 3400

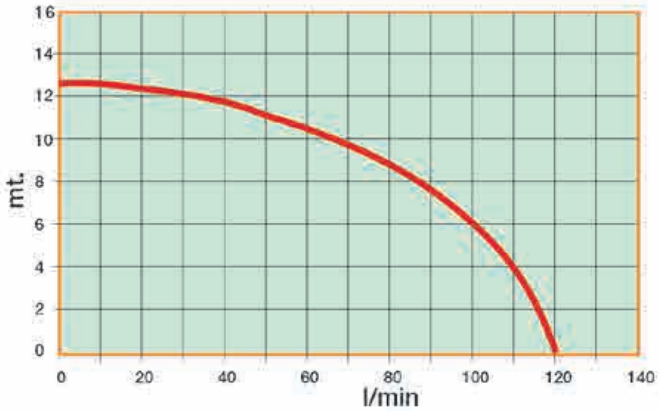

Curves referr to water T = 20°C

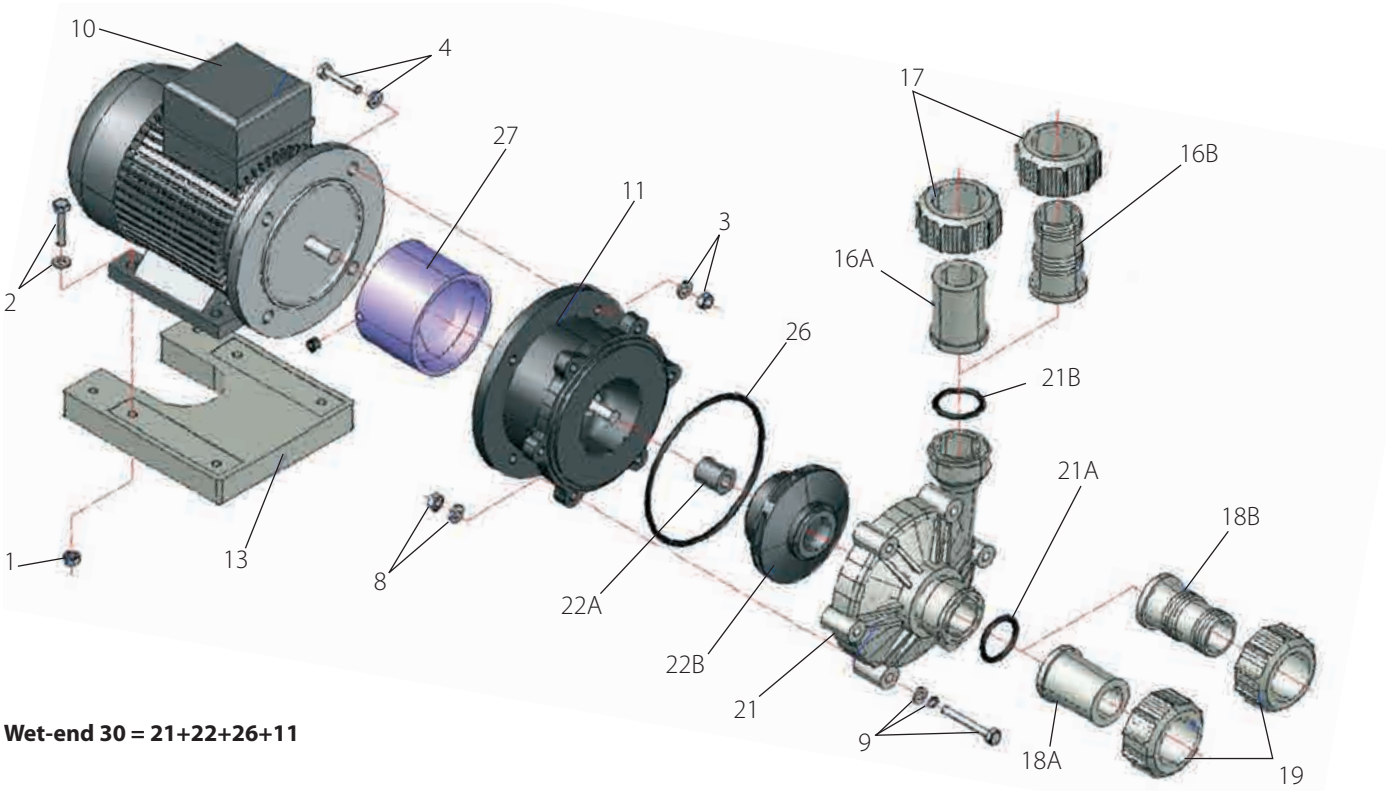

Wet-end 30 = 21+22+26+11

10	Motor	18	Suction connection	22	Impeller assembly
11	Bracket with rear casing & shaft	18A	Rigid piping suction	22A	Impeller bearing
13	Base plate	18B	Suction stub	22B	Impeller & magnet
16	Discharge connection	19	Suction nut	26	Pump housing O-Ring
16A	Discharge stub	21	Pump housing	27	Drive magnet
16B	Discharge hosebarb	21A	Suction O-Ring		
17	Discharge nut	21B	Discharge O-Ring		

LAFONTE.EU may modify data any time, without notice, in order to get product enhancement

lafonte.eu

evt12

MAGNETIC DRIVE PUMPS

ADVANTAGES

- Accidentally dry run capability with carbon impeller bearing
- Energy saving

FEATURES

- Seal less magnetic drive coupling
- Tmax exercise: PP 80°C - PVDF 98°C
- Connections:
  - socket union for rigid piping connection with PP, PVC, PVDF union ends choice
  - hose barb for hose connetcions
  - flanged

APPLICATION FIELDS

- Acid and alkaline soutions with minimal solid sospended particles
- Electroplating, Chemical and PCB industry

SPECIFICATIONS

	Flow Rate max (l/min.)	Head max (m)	Motor (kw)	IN/OUT D (mm)	T max (°C)	Weight* (kg)
50 Hz	200	12	0,55	50 x 32	PP: 80	PP: 9,50
60 Hz	210	13	0,55	50 x 32	PVDF: 98	PVDF: 10,00

* It depends on the motor

CONNECTION TYPE B

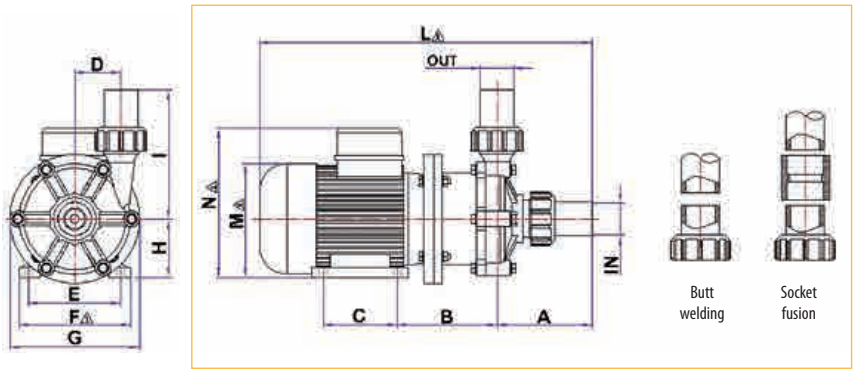

CONNECTION TYPE P

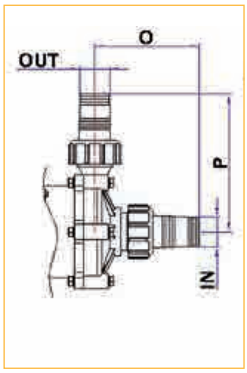

CONNECTION TYPE F

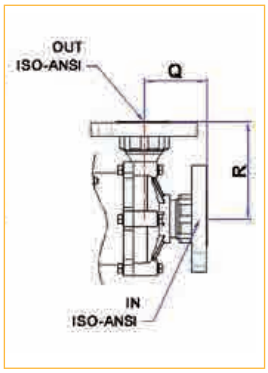

Dimensions:

Mod.	A	B	C	D	E	F⚠	G	H	I	L⚠	M⚠	N⚠	O	P	Q	R	IN	OUT
EVT12	108,0	174,0	90	65	112	136	195	71	155	446	137	170	153,0	200	67,0	125	50	32

⚠ It changes according with motor supplier

PUMP IDENTIFICATION							
Model	Pump body	Impeller	Shaft	Impeller bearing	O-Ring	Connections	Motor / rpm
EVT 12	P = PP F = PVDF	P = PP F = PVDF	C = Ceramic S = SIC	T = PTFE G = Carbon C = Ceramic	E = EPDM V = Viton	B = Socket union F = Flanged P = Hosebarb	A = 50 Hz / 2800 B = 60 Hz / 3400
EVT 12	**P**	**P**	**C**	**G**	**E**	**B**	**A**

EVT - Pumps have dry run accidentally capability when equipped with carbon impeller bearing

Performance Curve 50 Hz - Rpm 2800

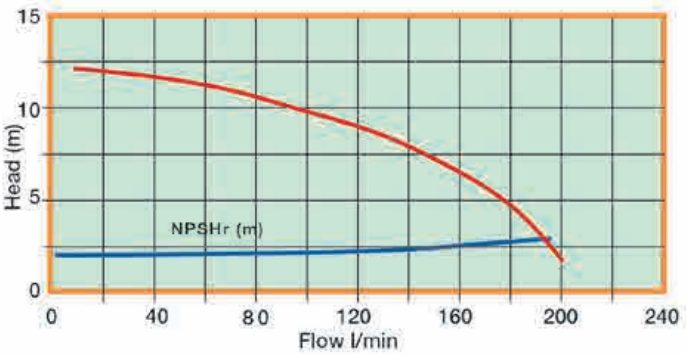

Performance Curve 60 Hz - Rpm 3400

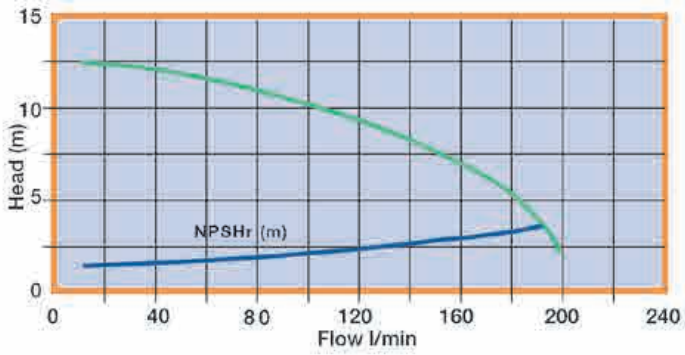

Curves referr to water T = 20°C

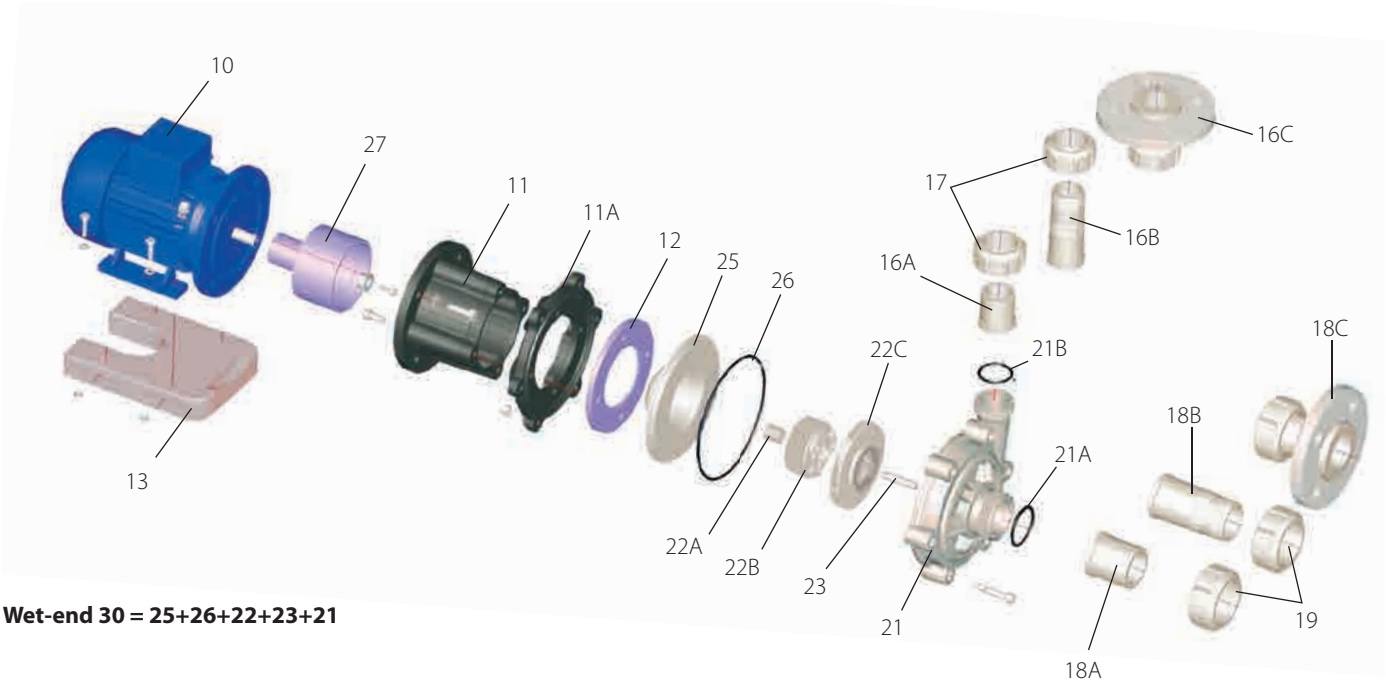

Wet-end 30 = 25+26+22+23+21

10	Motor	17	Discharge nut	22	Impeller assembly
11	Bracket	18A	Rigid piping suction	22A	Impeller bearing
11A	Flange Bracket	18B	Suction hosebarb	22B	Impeller magnet
12	Centering ring	18C	Suction flange	22C	impeller
13	Base plate	19	Suction nut	23	Shaft
16A	Rigid piping discharge	21	Pump housing	25	Rear casing
16B	Discharge hosebarb	21A	Suction O-Ring	26	Pump housing O-Ring
16C	Discharge flange	21B	Discharge O-Ring	27	Drive magnet

LAFONTE.EU may modify data any time, without notice, in order to get product enhancement

evt15

MAGNETIC DRIVE PUMPS

ADVANTAGES

- Accidentally dry run capability with carbon impeller bearing
- Energy saving

FEATURES

- Seal less magnetic drive coupling
- Tmax exercise: PP 80°C - PVDF 98°C
- Connections:
  - socket union for rigid piping connection with PP, PVC, PVDF union ends choice
  - hose barb for hose connetcions
  - flanged

APPLICATION FIELDS

- Acid and alkaline soutions with minimal solid sospended particles
- Electroplating, Chemical and PCB industry

SPECIFICATIONS

	Flow Rate max (l/min.)	Head max (m)	Motor (kw)	IN/OUT D (mm)	T max (°C)	Weight* (kg)
50 Hz	270	15	0,70	50 x 40	PP: 80	PP: 10,50
60 Hz	275	17	0,70	50 x 40	PVDF: 98	PVDF: 11,00

* It depends on the motor

CONNECTION TYPE B

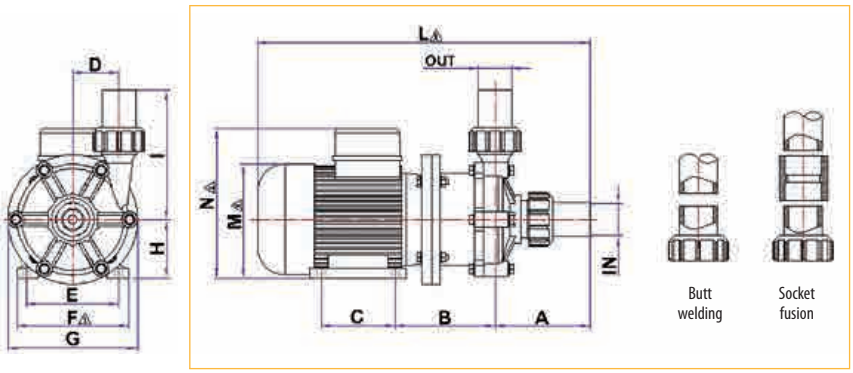

CONNECTION TYPE P

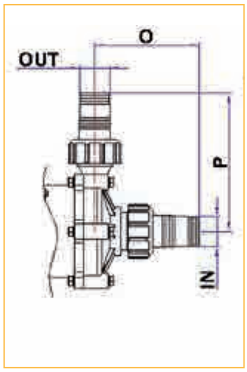

CONNECTION TYPE F

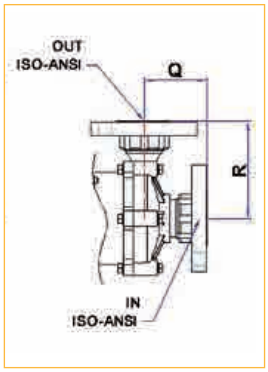

Dimensions:

Mod.	A	B	C	D	E	F⚠	G	H	I	L⚠	M⚠	N⚠	O	P	Q	R	IN	OUT
EVT15	108,0	174,0	90	65	112	136	195	71	155	446	137	170	153,0	210	67,0	125	50	40

⚠ It changes according with motor supplier

PUMP IDENTIFICATION							
Model	Pump body	Impeller	Shaft	Impeller bearing	O-Ring	Connections	Motor /rpm
EVT 15	P = PP F = PVDF	P = PP F = PVDF	C = Ceramic S = SIC	T = PTFE G = Carbon C = Ceramic	E = EPDM V = Viton	B = Socket union F = Flanged P = Hosebarb	A = 50 Hz / 2800 B = 60 Hz / 3400
EVT 15	**P**	**P**	**C**	**G**	**E**	**B**	**A**

EVT - Pumps have dry run accidentally capability when equipped with carbon impeller bearing

Performance Curve 50 Hz - Rpm 2800

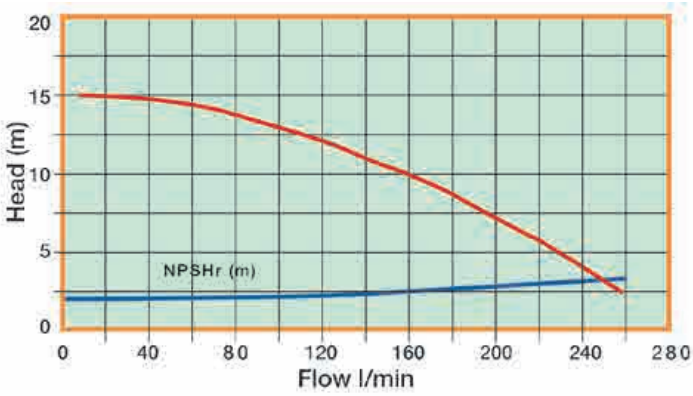

Performance Curve 60 Hz - Rpm 3400

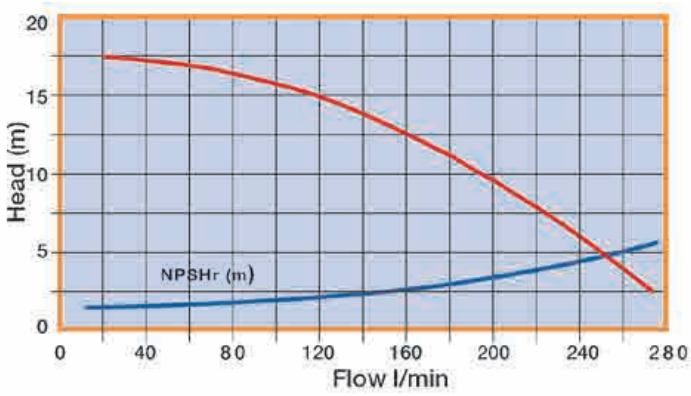

Curves referr to water T = 20°C

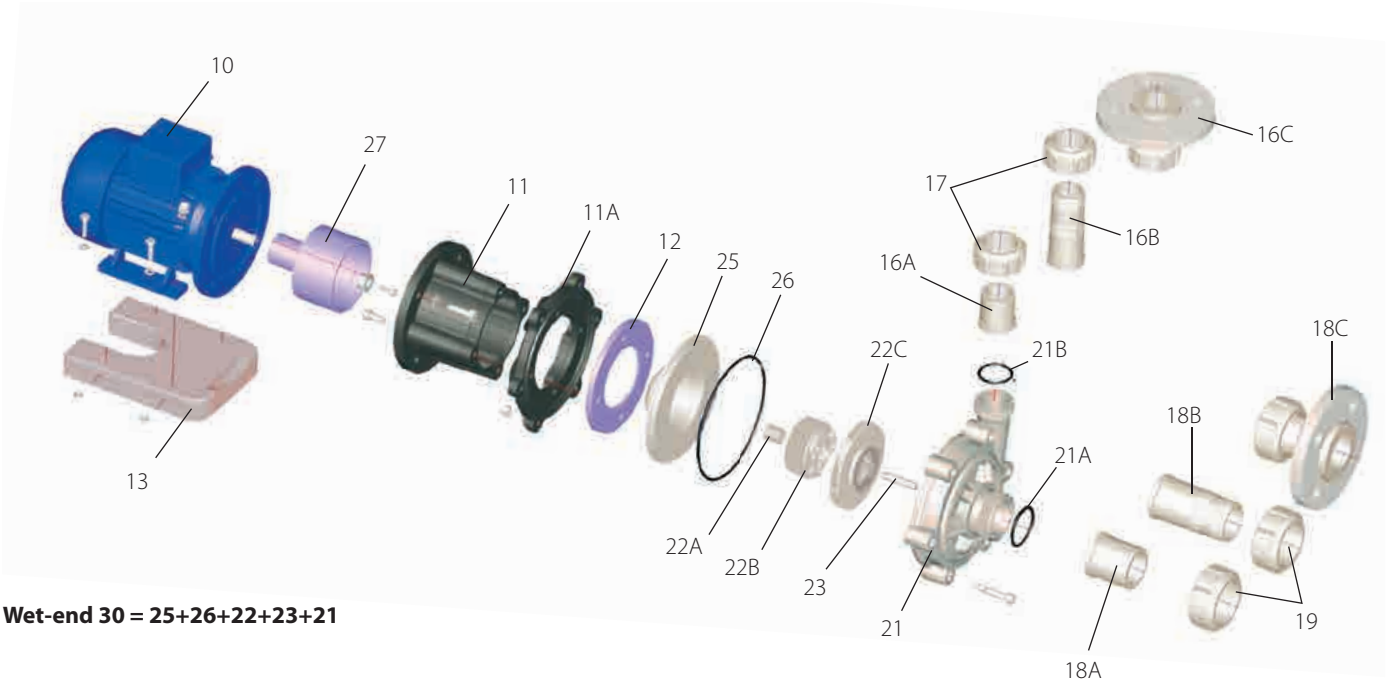

Wet-end 30 = 25+26+22+23+21

10	Motor	17	Discharge nut	22	Impeller assembly
11	Bracket	18A	Rigid piping suction	22A	Impeller bearing
11A	Flange bracket	18B	Suction hosebarb	22B	Impeller magnet
12	Centering ring	18C	Suction flange	22C	impeller
13	Base plate	19	Suction nut	23	Shaft
16A	Rigid piping discharge	21	Pump housing	25	Rear casing
16B	Discharge hosebarb	21A	Suction O-Ring	26	Pump housing O-Ring
16C	Discharge flange	21B	Discharge O-Ring	27	Drive magnet

LAFONTE.EU may modify data any time, without notice, in order to get product enhancement

lafonte.eu

evt20

MAGNETIC DRIVE PUMPS

ADVANTAGES

- Accidentally dry run capability with carbon impeller bearing
- Energy saving

FEATURES

- Seal less magnetic drive coupling
- Tmax exercise: PP 80°C - PVDF 98°C
- Connections:
  - socket union for rigid piping connection with PP, PVC, PVDF union ends choice
  - hose barb for hose connetcions
  - flanged

APPLICATION FIELDS

- Acid and alkaline soutions with minimal solid sospended particles
- Electroplating, Chemical and PCB industry

SPECIFICATIONS

	Flow Rate max (l/min.)	Head max (m)	Motor (kw)	IN/OUT D (mm)	T max (°C)	Weight* (kg)
50 Hz	320	16	1,10	50 x 40	PP: 80	PP: 15,50
60 Hz	350	20	1,10	50 x 40	PVDF: 98	PVDF: 15,50

* It depends on the motor

CONNECTION TYPE B

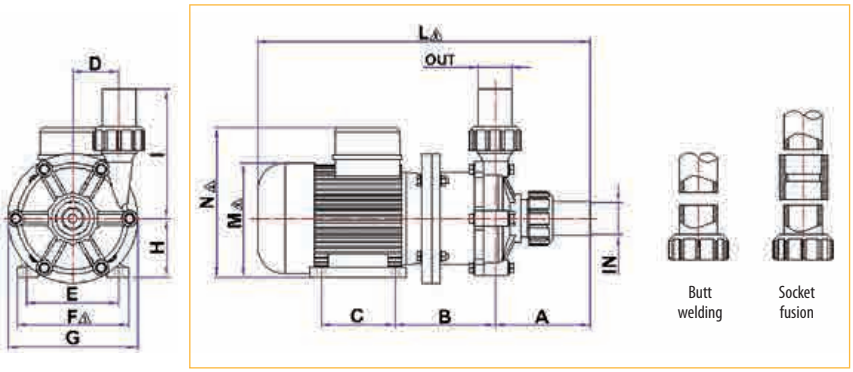

CONNECTION TYPE P

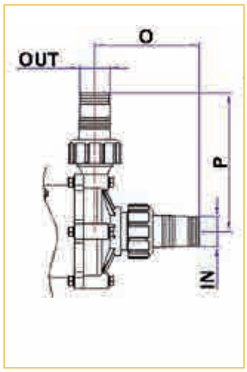

CONNECTION TYPE F

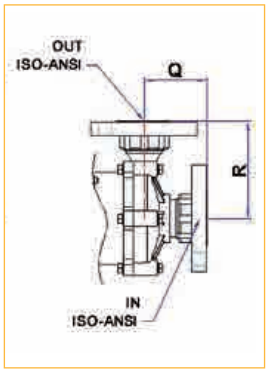

Dimensions:

Mod.	A	B	C	D	E	F⚠	G	H	I	L⚠	M⚠	N⚠	O	P	Q	R	IN	OUT
EVT20	108,0	179,0	100	65	125	160	200	80	155	475	156	210	153,0	210	67,0	125	50	40

⚠ It changes according with motor supplier

PUMP IDENTIFICATION							
Model	Pump body	Impeller	Shaft	Impeller bearing	O-Ring	Connections	Motor / rpm
EVT 20	P = PP F = PVDF	P = PP F = PVDF	C = Ceramic S = SIC	T = PTFE G = Carbon C = Ceramic	E = EPDM V = Viton	B = Socket union F = Flanged P = Hosebarb	A = 50 Hz / 2800 B = 60 Hz / 3400
EVT 20	**P**	**P**	**C**	**G**	**E**	**B**	**A**

EVT - Pumps have dry run accidentally capability when equipped with carbon impeller bearing

Performance Curve 50 Hz - Rpm 2800

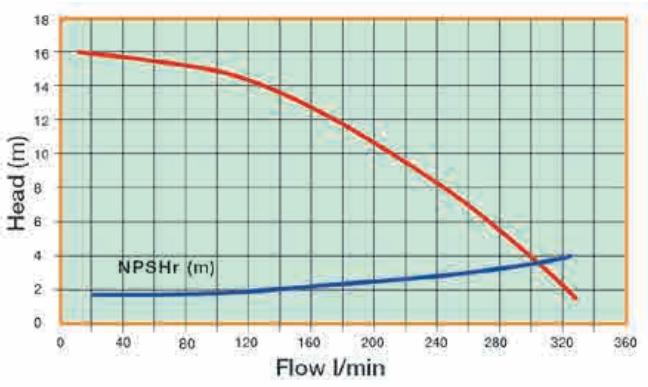

Performance Curve 60 Hz - Rpm 3400

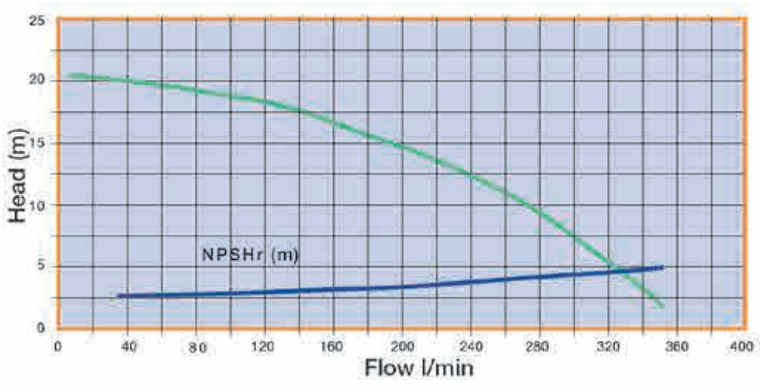

Curves referr to water T = 20°C

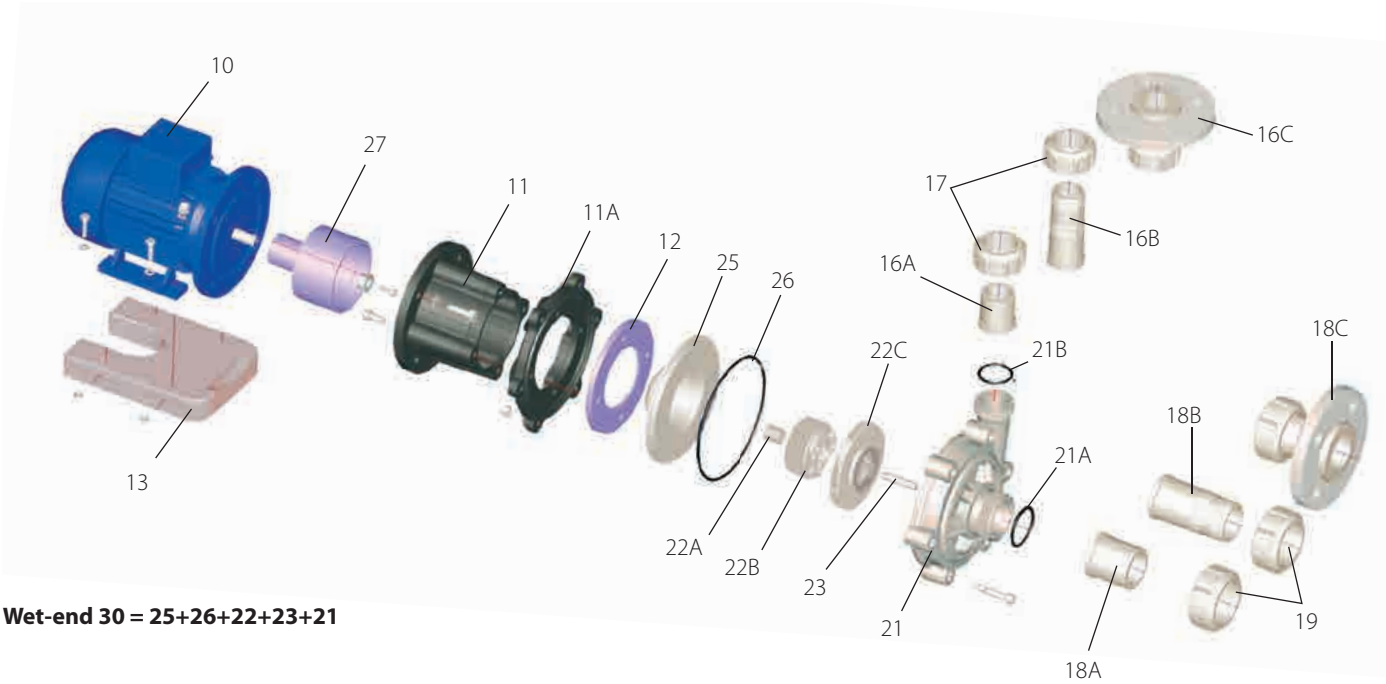

Wet-end 30 = 25+26+22+23+21

10	Motor	17	Discharge nut	22	Impeller assembly
11	Bracket	18A	Rigid piping suction	22A	Impeller bearing
11A	Flange Bracket	18B	Suction hosebarb	22B	Impeller magnet
12	Centering ring	18C	Suction flange	22C	impeller
13	Base plate	19	Suction nut	23	Shaft
16A	Rigid piping discharge	21	Pump housing	25	Rear casing
16B	Discharge hosebarb	21A	Suction O-Ring	26	Pump housing O-Ring
16C	Discharge flange	21B	Discharge O-Ring	27	Drive magnet

LAFONTE.EU may modify data any time, without notice, in order to get product enhancement

evt25

MAGNETIC DRIVE PUMPS

ADVANTAGES

- Accidentally dry run capability with carbon impeller bearing
- Energy saving

FEATURES

- Seal less magnetic drive coupling
- Tmax exercise: PP 80°C - PVDF 98°C
- Connections:
  - socket union for rigid piping connection with PP, PVC, PVDF union ends choice
  - hose barb for hose connetcions
  - flanged

APPLICATION FIELDS

- Acid and alkaline soutions with minimal solid sospended particles
- Electroplating, Chemical and PCB industry

SPECIFICATIONS

	Flow Rate max (l/min.)	Head max (m)	Motor (kw)	IN/OUT D (mm)	T max (°C)	Weight* (kg)
50 Hz	400	21	1,50	63 x 40	PP: 80	PP: 23,00
60 Hz	420	21	1,50	63 x 40	PVDF: 98	PVDF: 26,00

* It depends on the motor

CONNECTION TYPE B

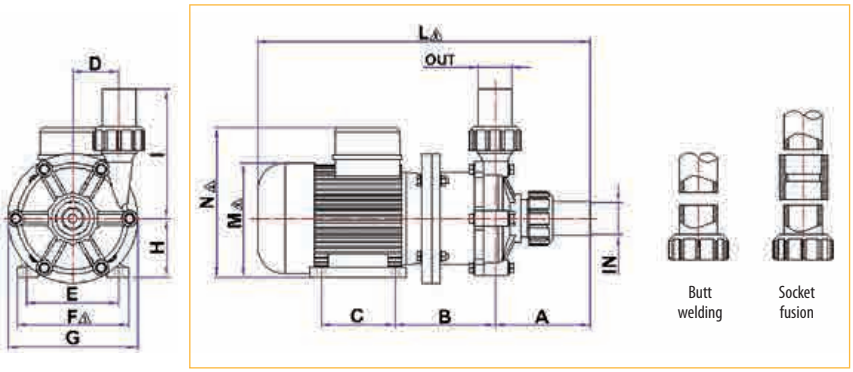

CONNECTION TYPE P

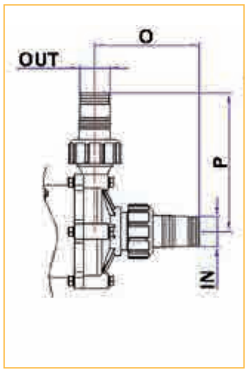

CONNECTION TYPE F

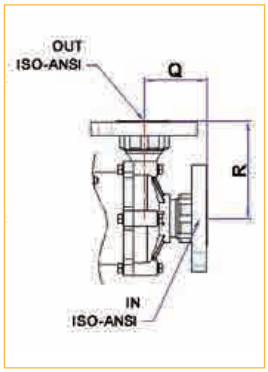

Dimensions:

Mod.	A	B	C	D	E	F⚠	G	H	I	L⚠	M⚠	N⚠	O	P	Q	R	IN	OUT
EVT25	144,0	198,0	100	84	140	170	246	90	201	551	176	220	175,0	236	86,0	160	63	40/50*

⚠ It changes according with motor supplier

*Flanged Version

PUMP IDENTIFICATION							
Model	Pump body	Impeller	Shaft	Impeller bearing	O-Ring	Connections	Motor / rpm
EVT 25	P = PP F = PVDF	P = PP F = PVDF	C = Ceramic S = SIC	T = PTFE G = Carbon C = Ceramic	E = EPDM V = Viton	B = Socket union F = Flanged P = Hosebarb	A = 50 Hz / 2800 B = 60 Hz / 3400
EVT 25	**P**	**P**	**C**	**G**	**E**	**B**	**A**

EVT - Pumps have dry run accidentally capability when equipped with carbon impeller bearing

Performance Curve 50 Hz - Rpm 2800

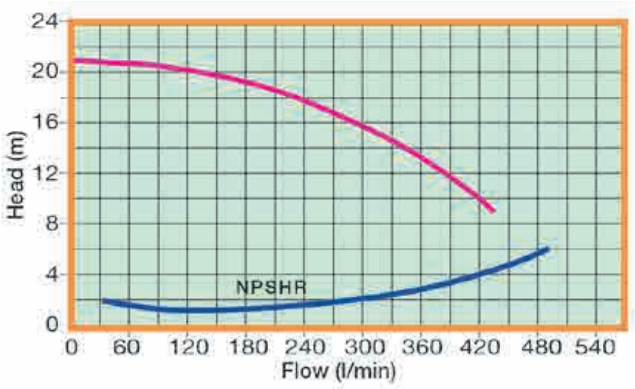

Performance Curve 60 Hz - Rpm 3400

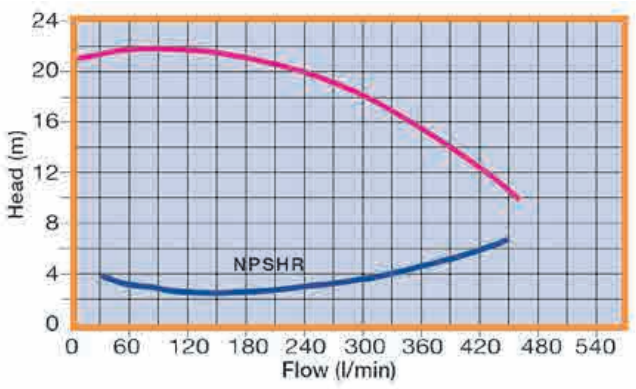

Curves referr to water T = 20°C

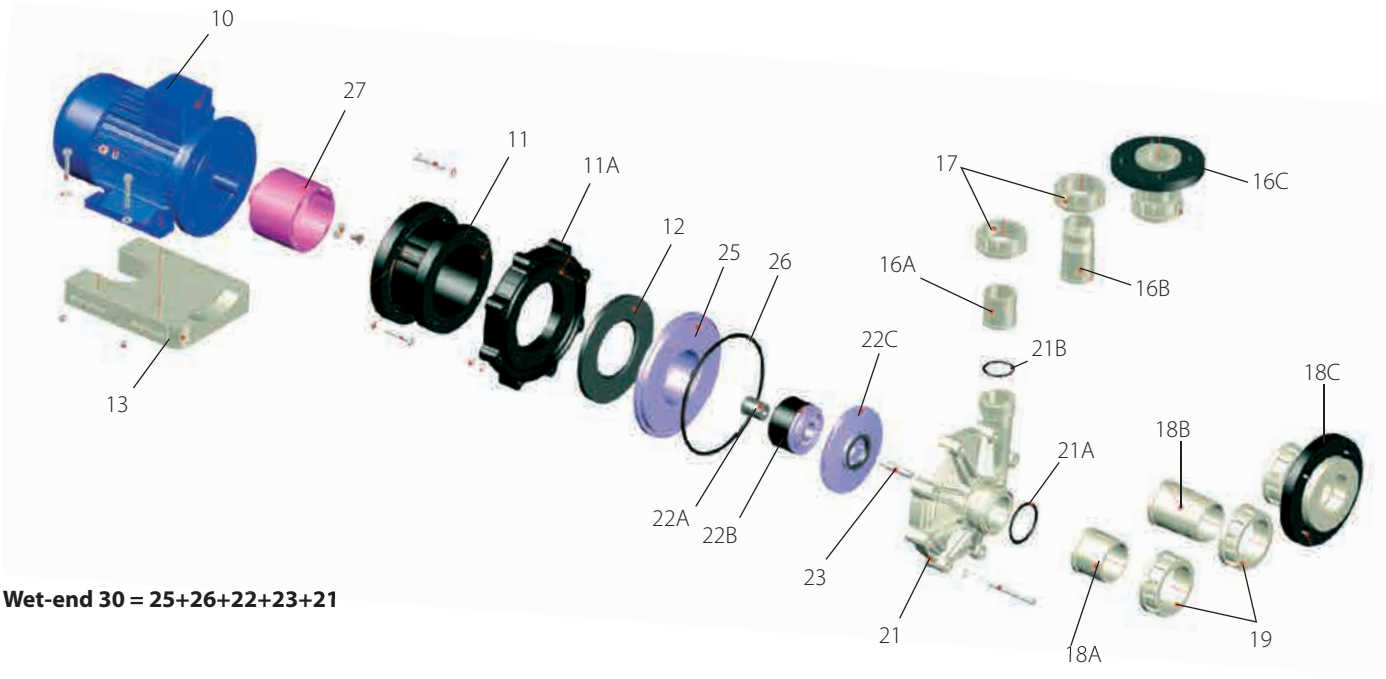

Wet-end 30 = 25+26+22+23+21

10	Motor	17	Discharge nut	22	Impeller assembly
11	Bracket	18A	Rigid piping suction	22A	Impeller bearing
11A	Flange Bracket	18B	Suction hosebarb	22B	Impeller magnet
12	Centering ring	18C	Suction flange	22C	impeller
13	Base plate	19	Suction nut	23	Shaft
16A	Rigid piping discharge	21	Pump housing	25	Rear casing
16B	Discharge hosebarb	21A	Suction O-Ring	26	Pump housing O-Ring
16C	Discharge flange	21B	Discharge O-Ring	27	Drive magnet

LAFONTE.EU may modify data any time, without notice, in order to get product enhancement

lafonte.eu

evt30

MAGNETIC DRIVE PUMPS

ADVANTAGES

- Accidentally dry run capability with carbon impeller bearing
- Energy saving

FEATURES

- Seal less magnetic drive coupling
- Tmax exercise: PP 80°C - PVDF 98°C
- Connections:
  - socket union for rigid piping connection with PP, PVC, PVDF union ends choice
  - hose barb for hose connetcions
  - flanged

APPLICATION FIELDS

- Acid and alkaline soutions with minimal solid sospended particles
- Electroplating, Chemical and PCB industry

SPECIFICATIONS

	Flow Rate max (l/min.)	Head max (m)	Motor (kw)	IN/OUT D (mm)	T max (°C)	Weight* (kg)
50 Hz	520	28	2,20	63 x 50	PP: 80	PP: 28,00
60 Hz	520	28	2,20	63 x 50	PVDF: 98	PVDF: 30,00

* It depends on the motor

CONNECTION TYPE B

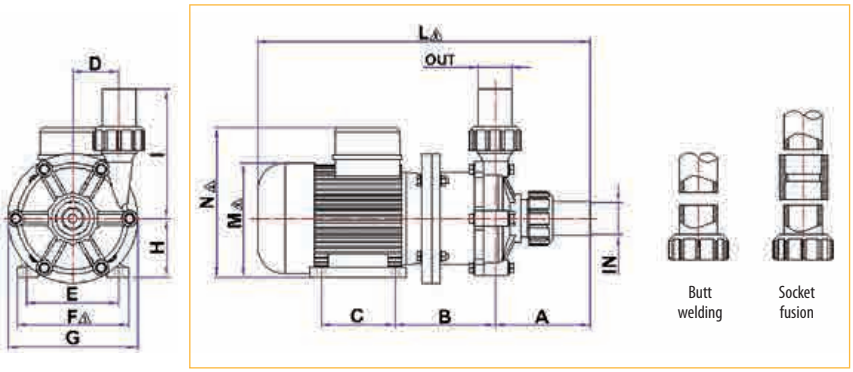

CONNECTION TYPE P

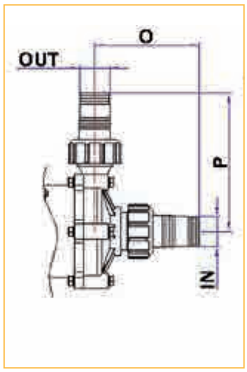

CONNECTION TYPE F

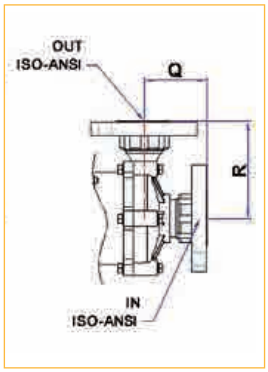

Dimensions:

Mod.	A	B	C	D	E	F⚠	G	H	I	L⚠	M⚠	N⚠	O	P	Q	R	IN	OUT
EVT30	144,0	198,0	125	84	140	170	246	90	201	567	176	220	175,0	246	86,0	160	63	50

⚠ It changes according with motor supplier

PUMP IDENTIFICATION							
Model	Pump body	Impeller	Shaft	Impeller bearing	O-Ring	Connections	Motor / rpm
EVT 30	P = PP F = PVDF	P = PP F = PVDF	C = Ceramic S = SIC	T = PTFE G = Carbon C = Ceramic	E = EPDM V = Viton	B = Socket union F = Flanged P = Hosebarb	A = 50 Hz / 2800 B = 60 Hz / 3400
EVT 30	**P**	**P**	**C**	**G**	**E**	**B**	**A**

EVT - Pumps have dry run accidentally capability when equipped with carbon impeller bearing

Performance Curve 50 Hz - Rpm 2800

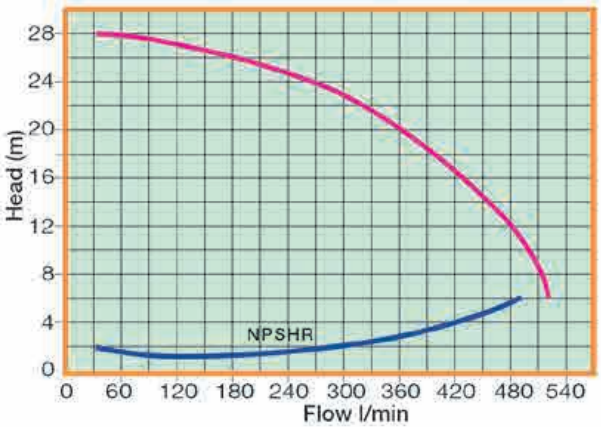

Performance Curve 60 Hz - Rpm 3400

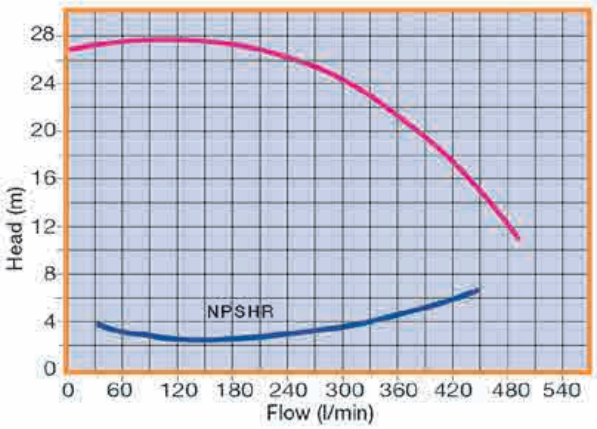

Curves referr to water T = 20°C

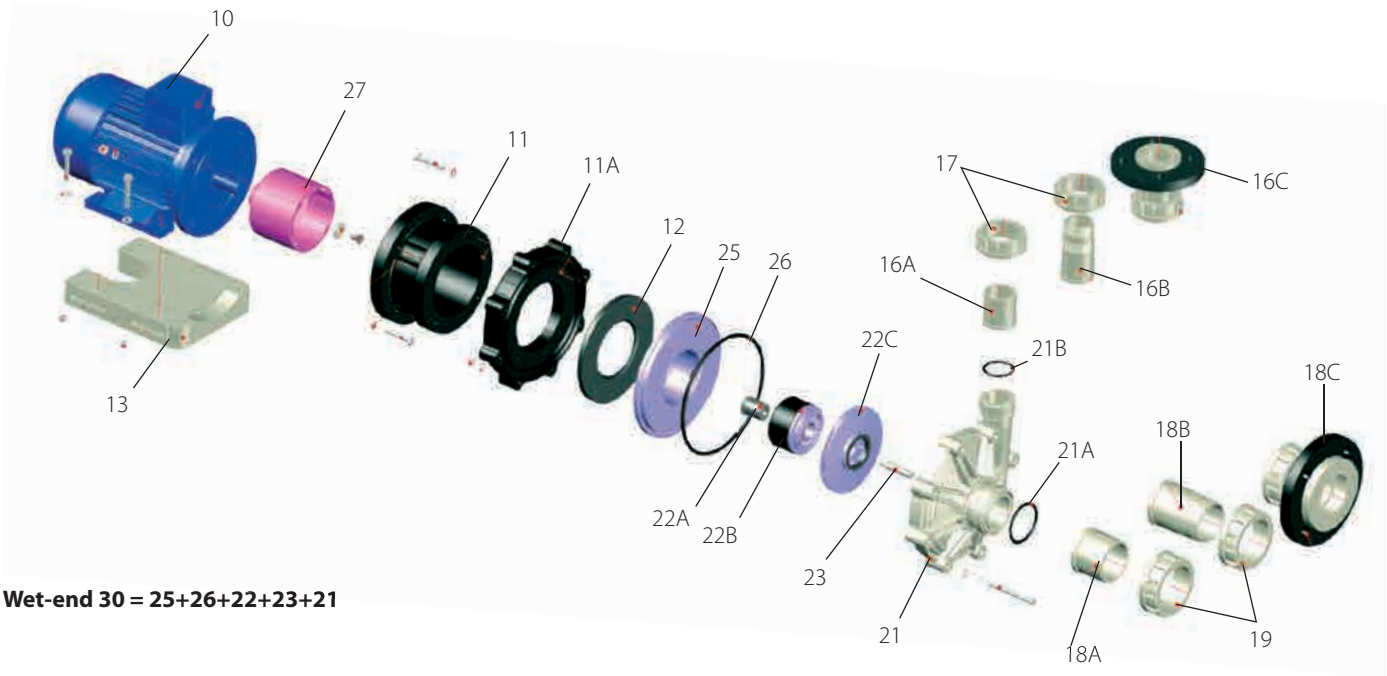

Wet-end 30 = 25+26+22+23+21

10	Motor	17	Discharge nut	22	Impeller assembly
11	Bracket	18A	Rigid piping suction	22A	Impeller bearing
11A	Flange Bracket	18B	Suction hosebarb	22B	Impeller magnet
12	Centering ring	18C	Suction flange	22C	impeller
13	Base plate	19	Suction nut	23	Shaft
16A	Rigid piping discharge	21	Pump housing	25	Rear casing
16B	Discharge hosebarb	21A	Suction O-Ring	26	Pump housing O-Ring
16C	Discharge flange	21B	Discharge O-Ring	27	Drive magnet

LAFONTE.EU may modify data any time, without notice, in order to get product enhancement

lafonte™.eu

MAGNETIC DRIVE PUMPS

MPA 23/11 - MPA 41/31

Operating principle

The distinctive feature of magnetic drive pump is the absence of a connection between motor and pump.
The rotation of the impeller is obtained by the magnetic force between two magnets : one is coupled to the motor, the other drives the impeller.
This construction guaranties the highest reliability and avoids any leackage, so maintenance interventions are reduced and simplified.

The materials used are:

- Polypropylene and PVDF for plastic components.
- Ceramics (Al2 O3 99,7%) for shaft and thrust ring.
- Rulon for bearings
- EPDM or Viton for the O-ring.

CE

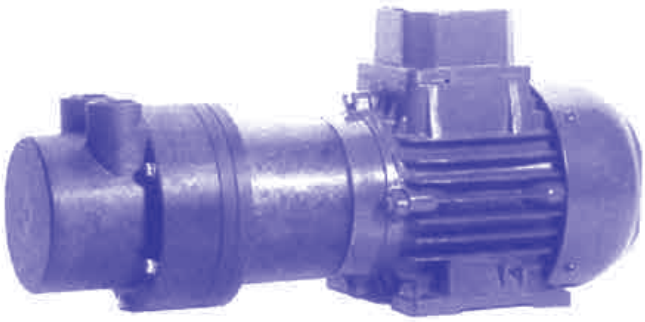

SELFPRIMING

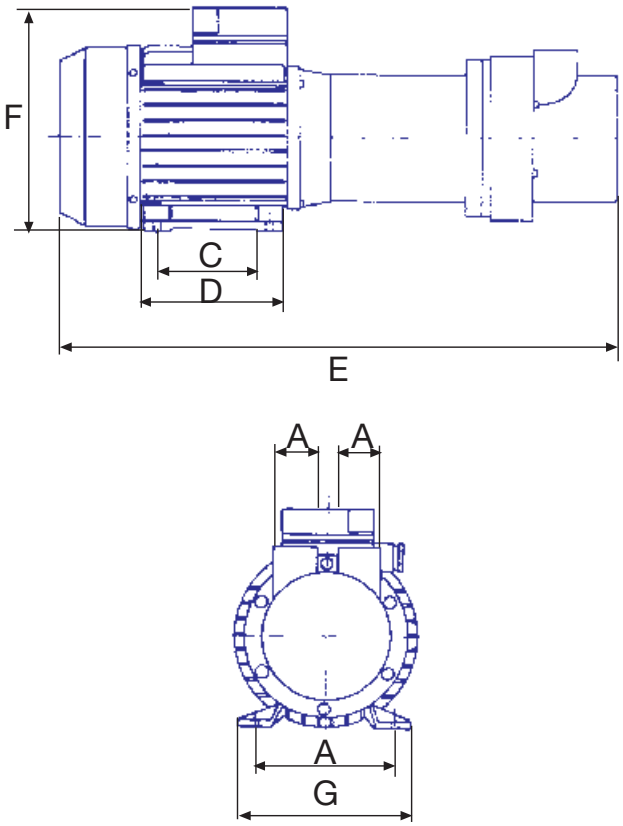

MODEL	MPA 23/11	MPA41/31
A	1/2”*	3/4”*
C	71	90
D	90	113
E	325	435
F	128	150
G	90	112
H	112	136
WATT	120	750
PHASES	1-3	1/3
Rpm	2800/3450	2800/3450
KG	4,300	9,200

* Female

MPA 23/11 - MPA 41/31

M A G N E T I C D R I V E P U M P S

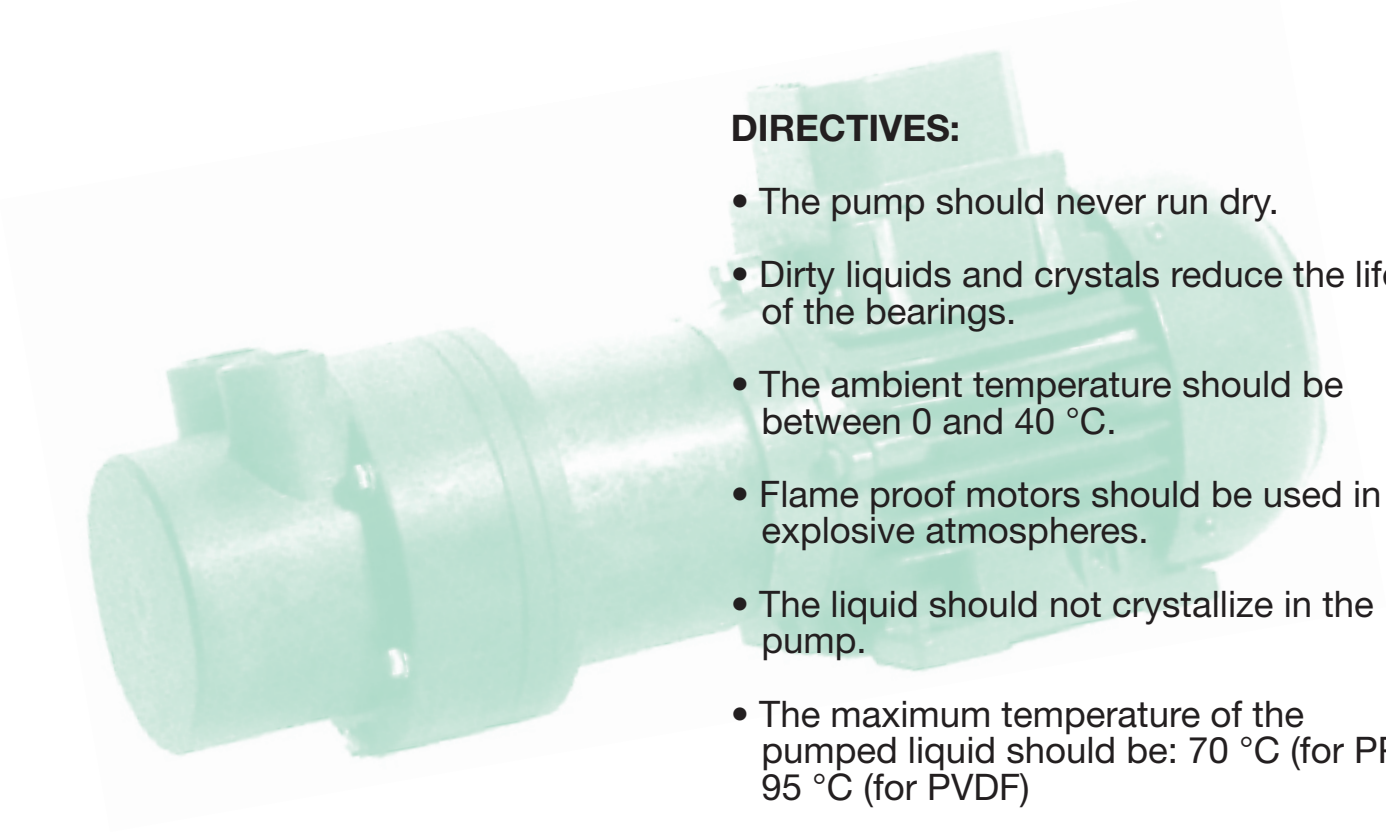

DIRECTIVES:

- The pump should never run dry.
- Dirty liquids and crystals reduce the life of the bearings.
- The ambient temperature should be between 0 and 40 °C.
- Flame proof motors should be used in explosive atmospheres.
- The liquid should not crystallize in the pump.
- The maximum temperature of the pumped liquid should be: 70 °C (for PP) 95 °C (for PVDF)
- The pump is self priming.

MPA 23/11 - MPA 41/31 **50Hz**

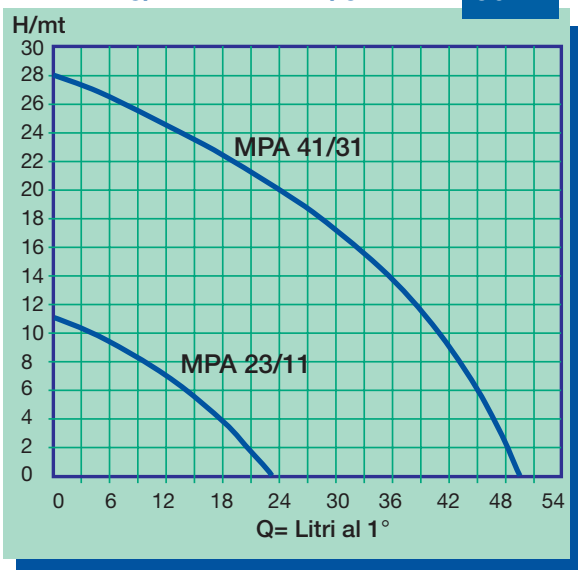

Curve references:
water at ambient temperature

EXPLODED VIEW MAGNETIC DRIVE PUMP

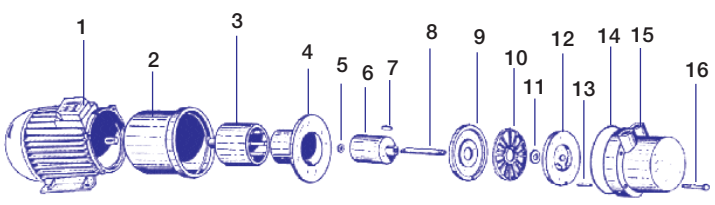

1 Motor	6 Impeller magnet	12 Counter flange
2 Flange	7 key	13 Key
3 Drive magnet	8 Shaft	14 O-ring
4 Rear casing	9 Flange	15 Front casing
5 Thrust ring	10 Impeller	16 Screw
	11 Thrust ring	

lafonte™.eu

MAGNETIC DRIVE PUMPS

MPA 320

Operating principle

The distinctive feature of magnetic drive pump is the absence of a connection between motor and pump.
The rotation of the impeller is obtained by the magnetic force between two magnets : one is coupled to the motor, the other drives the impeller.
This construction guaranties the highest reliability and avoids any leackage, so maintenance interventions are reduced and simplified.

The materials used are:

- Polypropylene and PVDF for plastic components.
- Ceramics (Al2 O3 99,7%) for shaft and thrust ring.
- Rulon for bearings
- EPDM or Viton for the O-ring.

CE

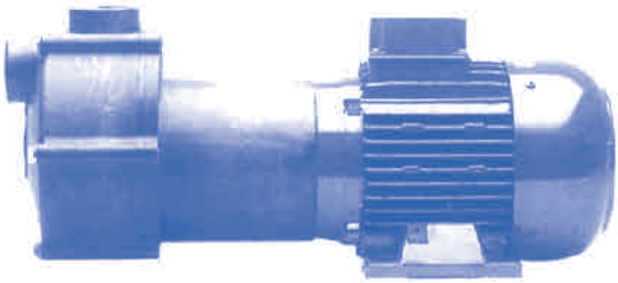

SELFPRIMING

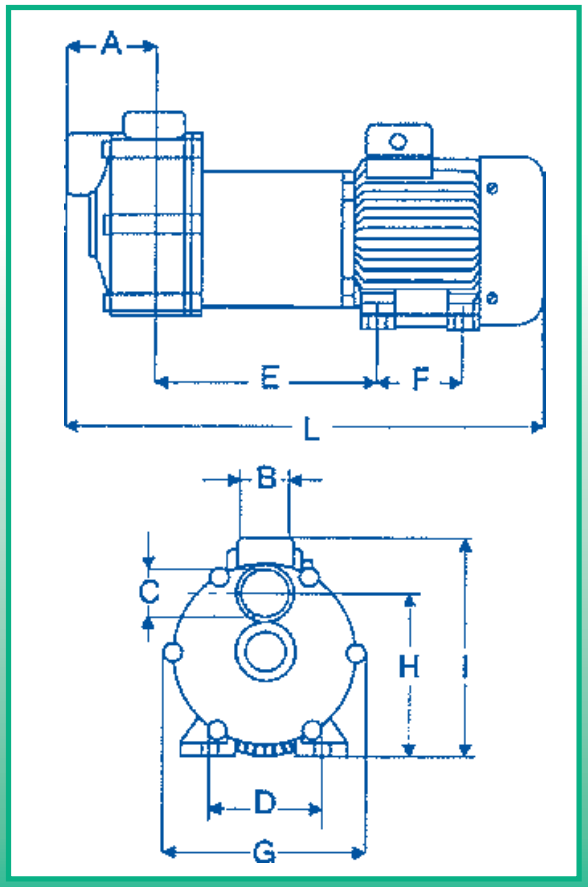

MODEL	MPA 320
A	83
B	1"1/2*
C	1"1/2*
D	140
E	235
F	100
G	220
H	171
I	224
L	510
KW	1,5
PHASES	1-3
Rpm	2800/3450
KG	18,7

* Female

MPA 320

MAGNETIC DRIVE PUMPS

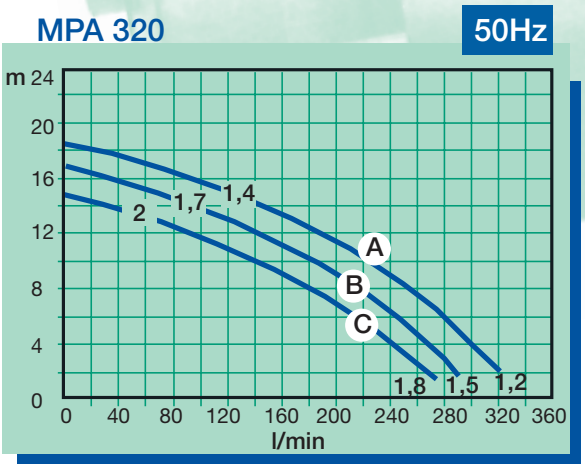

DIRECTIVES:

- The pump should never run dry.
- Dirty liquids and crystals reduce the life of the bearings.
- The ambient temperature should be between 0 and 40 °C.
- Flame proof motors should be used in explosive atmospheres.
- The liquid should not crystallize in the pump.
- The maximum temperature of the pumped liquid should be:
  70 °C (for PP) 95 °C (for PVDF)
- The pump is self priming.

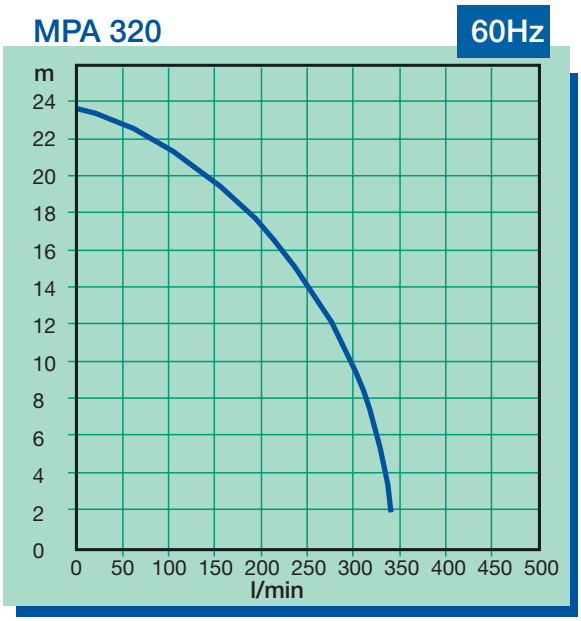

Curve references:
water at ambient temperature

EXPLODED VIEW MAGNETIC DRIVE PUMP

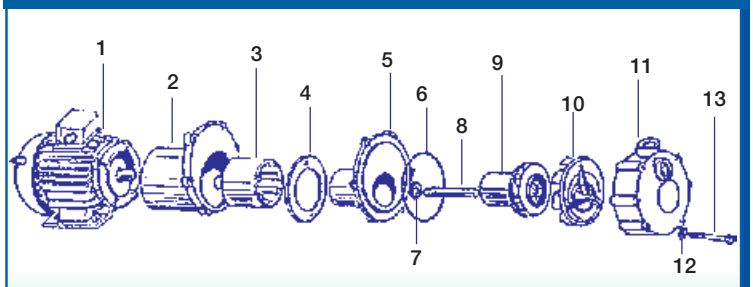

1 Motor
2 Flange
3 Drive magnet
4 Centring ring
5 Rear casing
6 O-ring
7 Thrust ring
8 Shaft
9 Impeller
10 Bushing guide with thrust ring
11 Pump casing
12 Washer
13 Screw

lafonte™.eu

MAGNETIC DRIVE PUMPS

MPC 042 - MPP 031

Operating principle

The distinctive feature of magnetic drive pump is the absence of a connection between motor and pump.
The rotation of the impeller is obtained by the magnetic force between two magnets : one is coupled to the motor, the other drives the impeller.
This construction guaranties the highest reliability and avoids any leackage, so maintenance interventions are reduced and simplified.

The materials used are:

- Polypropylene and PVDF for plastic components.
- Ceramics (Al2 O3 99,7%) for shaft and thrust ring.
- Rulon for bearings
- EPDM or Viton for the O-ring.

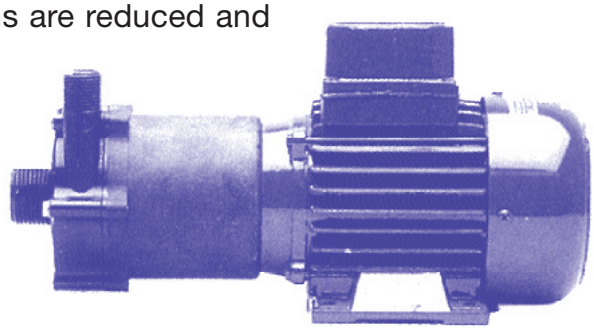

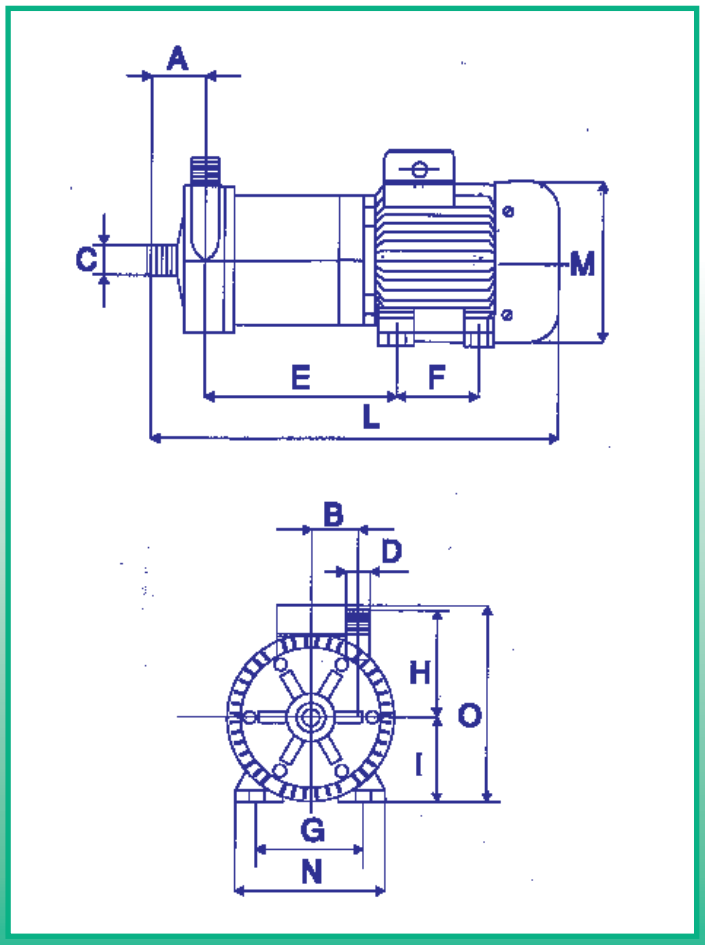

MODEL	MPC 042	MPP 031
A	38	34
B	36	30
C	1”	1/2”
D	1/2”	1/2”
E	109	115
F	71	71
G	90	90
H	72	63
I	56	56
L	280	279
M	110	110
N	107	112
O	128	150
WATT	120	90
PHASES	1	1-3
Rpm	2800/3450	2800/3450
KG	3,450	2,850

MPC 042 - MPP 031

M A G N E T I C D R I V E P U M P S

DIRECTIVES:

- The pump should never run dry.
- Dirty liquids and crystals reduce the life of the bearings.
- The ambient temperature should be between 0 and 40 °C.
- Flame proof motors should be used in explosive atmospheres.
- The liquid should not crystallize in the pump.
- The maximum temperature of the pumped liquid should be: 70 °C (for PP) 95 °C (for PVDF)
- The pump is normal priming.

MPC 042 - MPP 031 **50Hz**

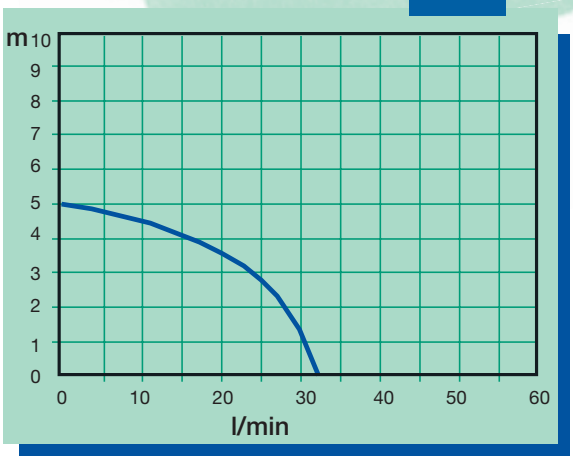

MPC 042 - MPP 031 **60Hz**

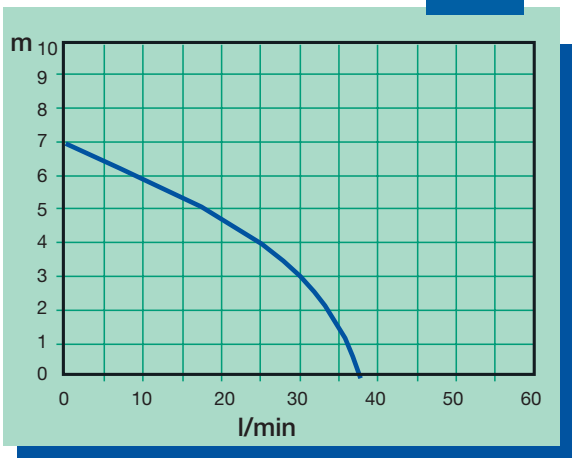

Curve references:
water at ambient temperature

EXPLODED VIEW MAGNETIC DRIVE PUMP

MPC 042

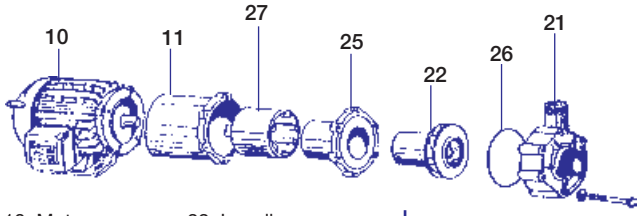

10 Motor
11 Flange
27 Drive magnet
25 Rear casing
22 Impeller
26 O-ring
21 Pump casing

Wet-end:
21+22+25+26 = 30

MPP 031

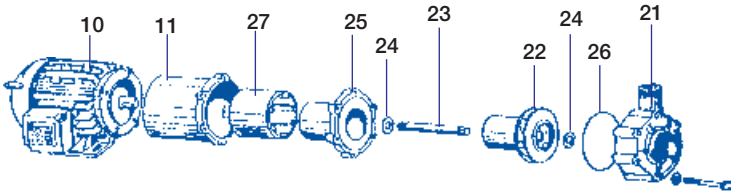

10 Motor
11 Flange
27 Drive magnet
25 Rear casing
24 Thrust
23 Shaft
22 Impeller
26 O-ring
21 Pump casing

Wet-end:
21+22+23+24+25+26 = 30

lafonte™.eu

MAGNETIC DRIVE PUMPS

MPP 051 - MPP 052

Operating principle

The distinctive feature of magnetic drive pump is the absence of a connection between motor and pump.
The rotation of the impeller is obtained by the magnetic force between two magnets : one is coupled to the motor, the other drives the impeller.
This construction guaranties the highest reliability and avoids any leackage, so maintenance interventions are reduced and simplified.

The materials used are:

- Polypropylene and PVDF for plastic components.
- Ceramics (Al2 O3 99,7%) for shaft and thrust ring.
- Rulon for bearings
- EPDM or Viton for the O-ring.

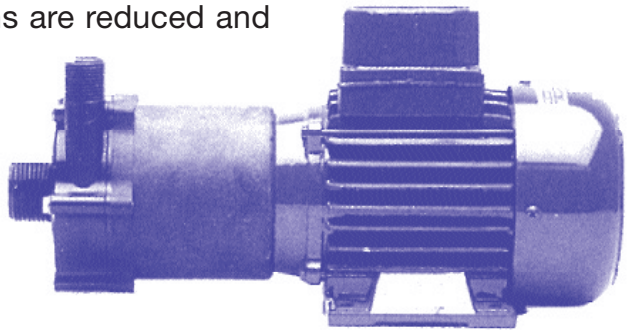

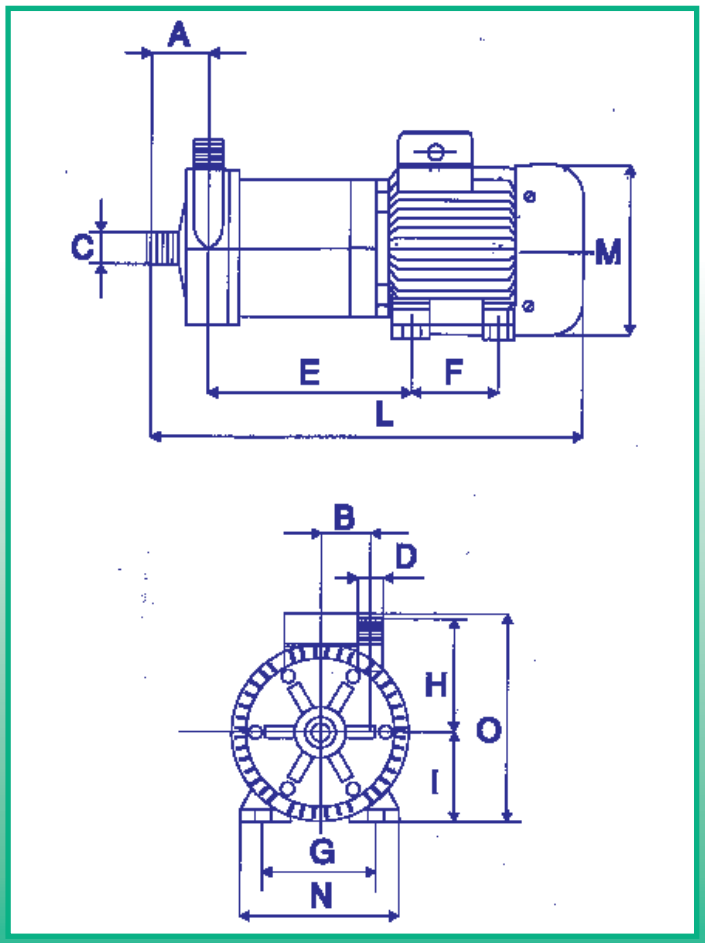

MODEL	MPP 051 - MPP 052
A	39
B	35
C	1”
D	1/2”
E	128
F	71
G	90
H	69
I	56
L	299
M	110
N	112
O	150
WATT	120
PHASES	1-3
Rpm	2800/3450
KG	4,000

MPP 051 - MPP 052

M A G N E T I C D R I V E P U M P S

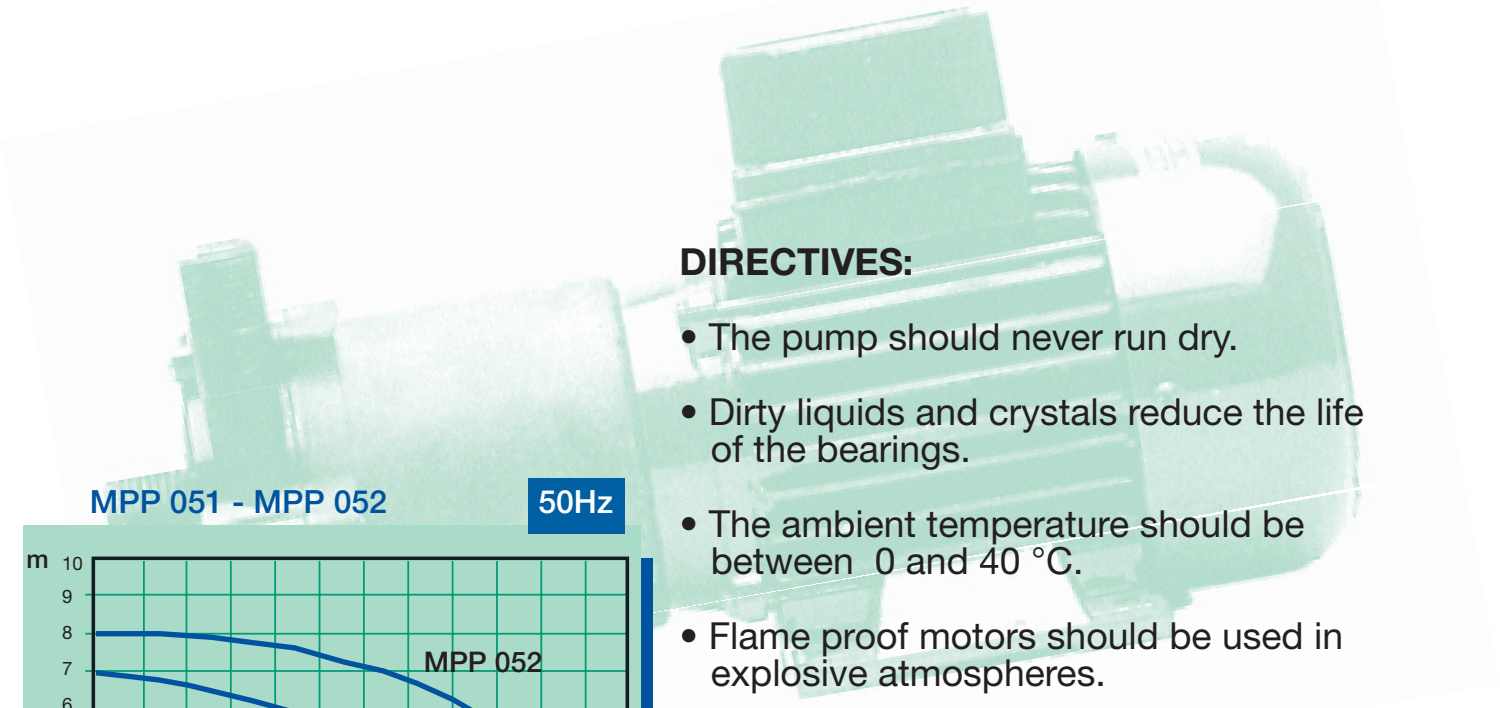

DIRECTIVES:

- The pump should never run dry.
- Dirty liquids and crystals reduce the life of the bearings.
- The ambient temperature should be between 0 and 40 °C.
- Flame proof motors should be used in explosive atmospheres.
- The liquid should not crystallize in the pump.
- The maximum temperature of the pumped liquid should be: 70 °C (for PP) 95 °C (for PVDF)
- The pump is normal priming.

MPP 051 - MPP 052 **50Hz**

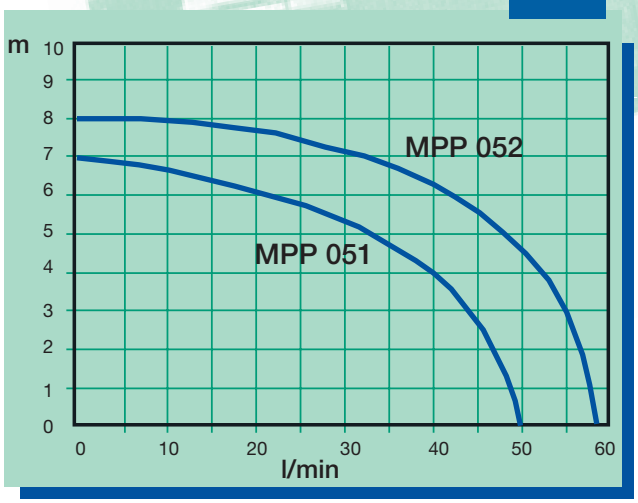

MPP 051 - MPP 052 **60Hz**

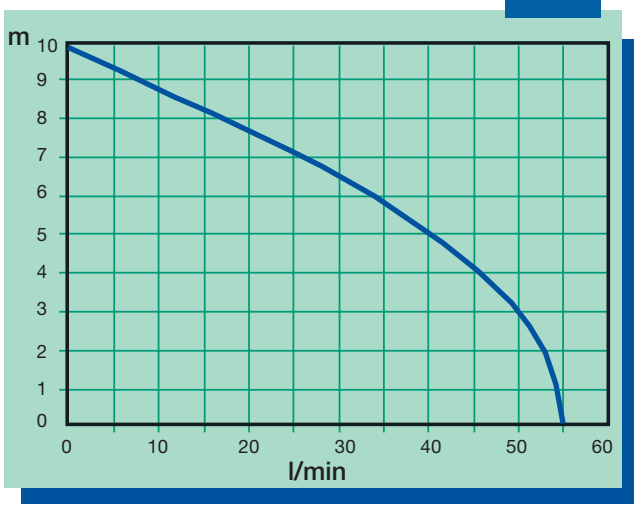

Curve references:
water at ambient temperature

EXPLODED VIEW MAGNETIC DRIVE PUMP

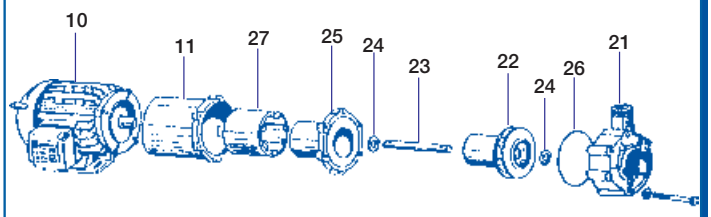

10 Motor	23 Shaft
11 Flange	22 Impeller
27 Drive magnet	26 O-ring
25 Rear casing	21 Pump casing
24 Thrust ring	

Wet-end:
21+22+23+24+25+26 = 30

lafonte™.eu

MAGNETIC DRIVE PUMPS

MPP 101 - MPP 201

Operating principle

The distinctive feature of magnetic drive pump is the absence of a connection between motor and pump.
The rotation of the impeller is obtained by the magnetic force between two magnets : one is coupled to the motor, the other drives the impeller.
This construction guaranties the highest reliability and avoids any leackage, so maintenance interventions are reduced and simplified.

The materials used are:

- Polypropylene and PVDF for plastic components.
- Ceramics (Al2 O3 99,7%) for shaft and thrust ring.
- Rulon for bearings
- EPDM or Viton for the O-ring.

CE

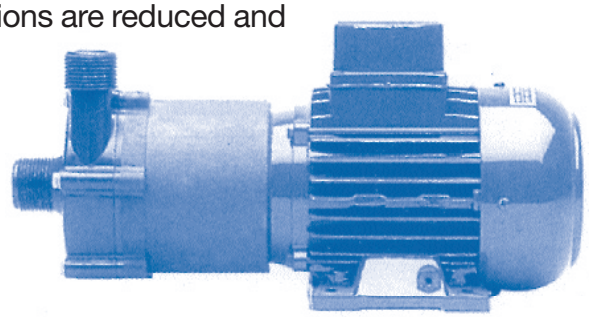

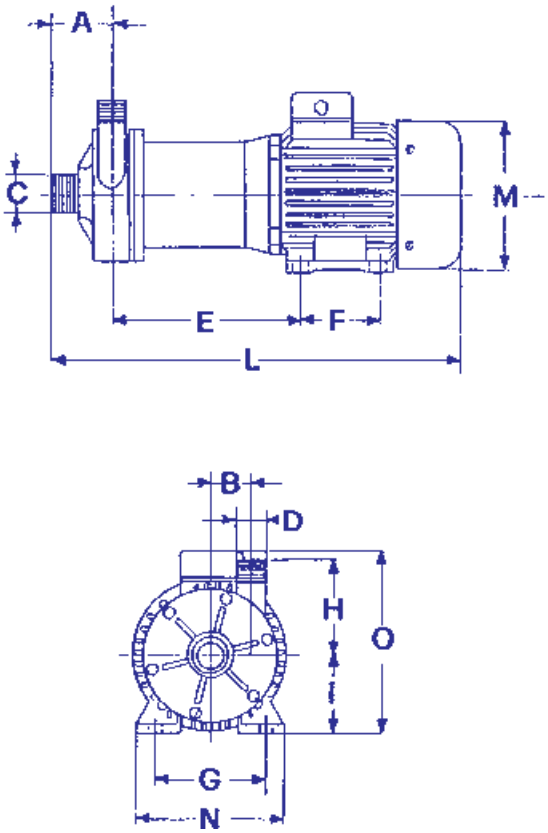

MODEL	MPP 101	MPP 201
A	50	66
B	38	38,5
C	1"	1"1/2
D	1"	1"
E	144	160
F	80	90
G	100	112
H	84	99,5
I	63	71
L*	242	398
M*	126	137
N	124	144
O*	165	185
WATT	220	550
PHASES	1-3	1-3
Rpm	2800/3450	2800/3450
Kg*	5,700	8,6

* It changes according to the assembled motor

MPP 101 - MPP 201

M A G N E T I C D R I V E P U M P S

MPP 101 — 50Hz

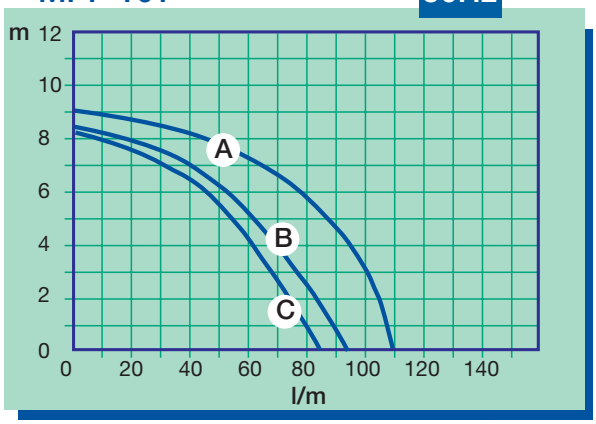

MPP 201 — 50Hz

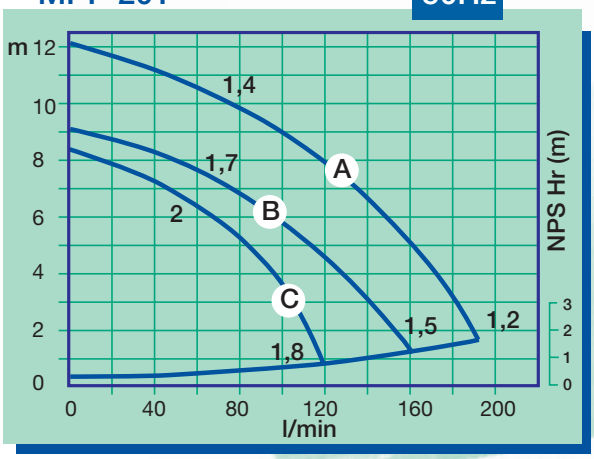

MPP 101 - 201 — 60Hz

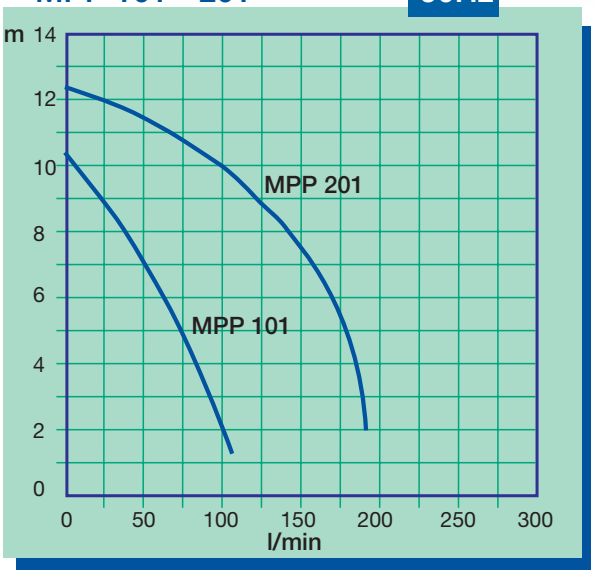

Curve references:
water at ambient temperature

DIRECTIVES:

- The pump should never run dry.
- Dirty liquids and crystals reduce the life of the bearings.
- The ambient temperature should be between 0 and 40 °C.
- Flame proof motors should be used in explosive atmospheres.
- The liquid should not crystallize in the pump.
- The maximum temperature of the pumped liquid should be: 70 °C (for PP) 95 °C (for PVDF)
- The pump is normal priming.

EXPLODED VIEW MAGNETIC DRIVE PUMP

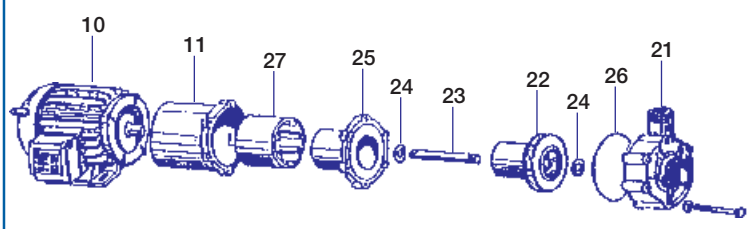

10	Motor	23	Shaft
11	Flange	22	Impeller
27	Drive magnet	24	Thrust ring
25	Rear casing	26	O-ring
24	Thrust ring	21	Pump casing

Wet-end:
21+22+23+24+25+26 = 30

lafonte™.eu

MAGNETIC DRIVE PUMPS

MPP 251 - MPP 302

Operating principle

The distinctive feature of magnetic drive pump is the absence of a connection between motor and pump.
The rotation of the impeller is obtained by the magnetic force between two magnets : one is coupled to the motor, the other drives the impeller. This construction guaranties the highest reliability and avoids any leackage, so maintenance interventions are reduced and simplified.

The materials used are:

- Polypropylene and PVDF for plastic components.
- Ceramics (Al2 O3 99,7%) for shaft and thrust ring.
- Rulon for bearings
- EPDM or Viton for the O-ring.

CE

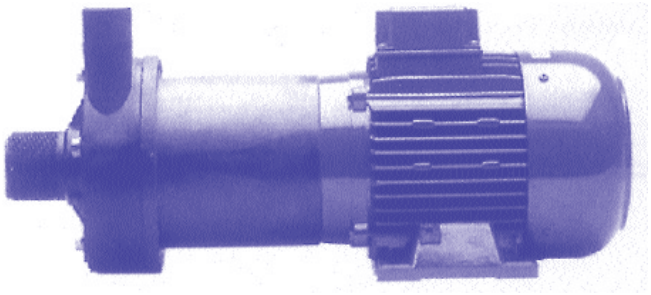

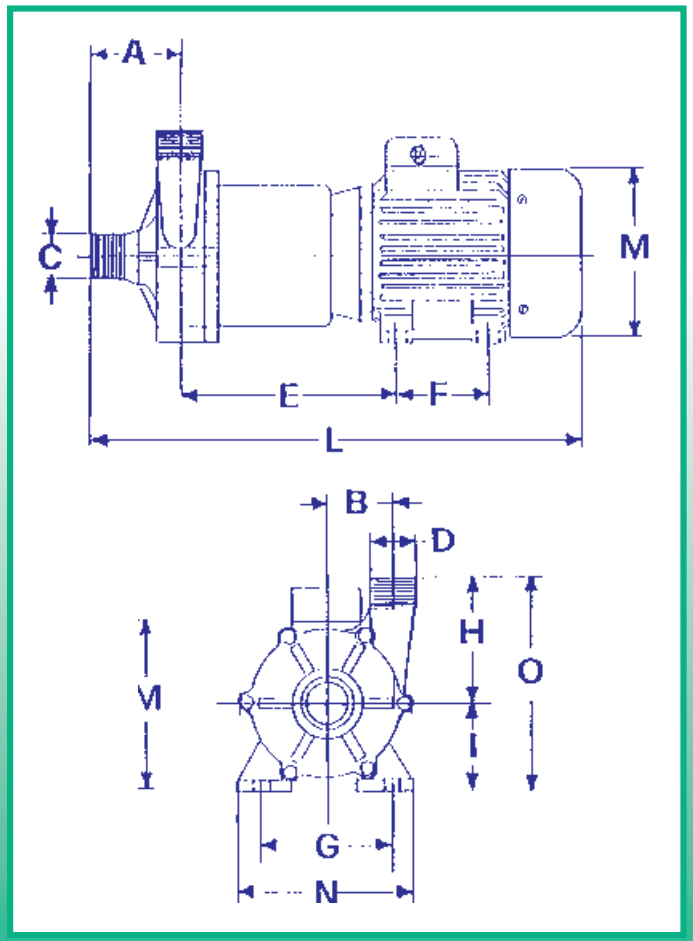

MODEL	MPP 251	MPP 302
A	74	74
B	58,5	58,5
C	2”	2”
D	1 1/4”	1 1/4”
E	186	202
F	100	100
G	125	140
H	131	131
I	80	90
L	448*	478*
M	156*	176*
N	155*	184*
O	211	221
KW	1,1	1,5
PHASES	3	3
Rpm	2800/3450	2800/3450
KG	15,8	18

* It changes according to the assembled motor

MPP 251 - MPP 302

M A G N E T I C D R I V E P U M P S

MPP 251 - KW 1,1

50Hz

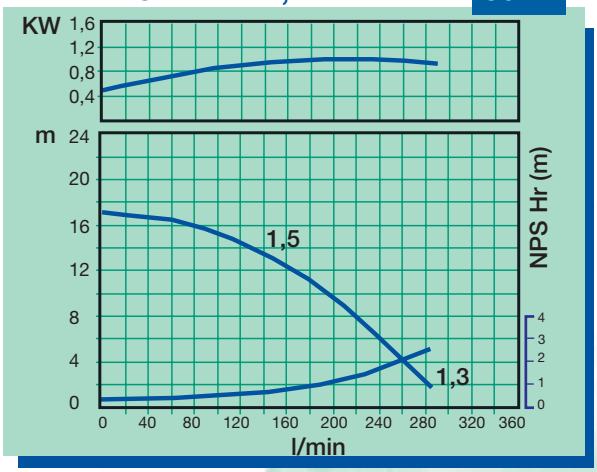

MPP 302 - KW 1,5

50Hz

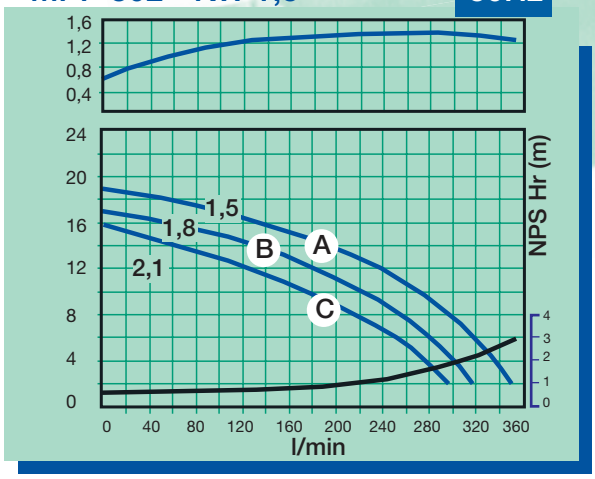

MPP 251 - MPP 302

60 Hz

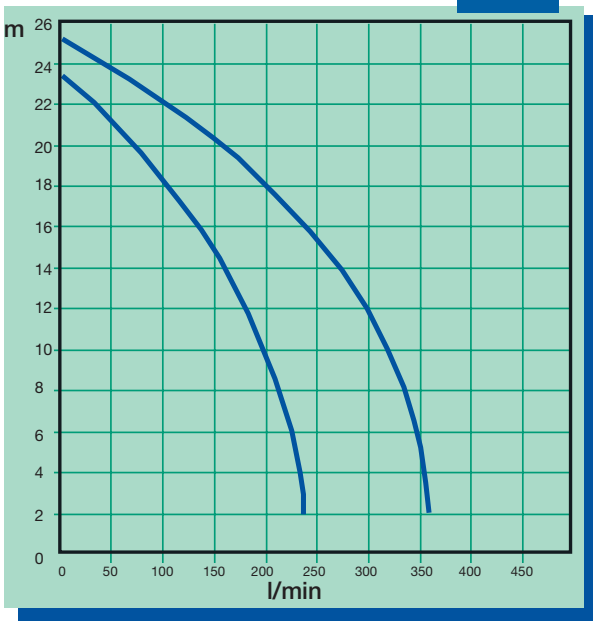

Curve references:
water at ambient temperature

DIRECTIVES:

- The pump should never run dry.
- Dirty liquids and crystals reduce the life of the bearings.
- The ambient temperature should be between 0 and 40 °C.
- Flame proof motors should be used in explosive atmospheres.
- The liquid should not crystallize in the pump.
- The maximum temperature of the pumped liquid should be: 70 °C (for PP) 95 °C (for PVDF)
- The pump is self priming.

EXPLODED VIEW MAGNETIC DRIVE PUMP

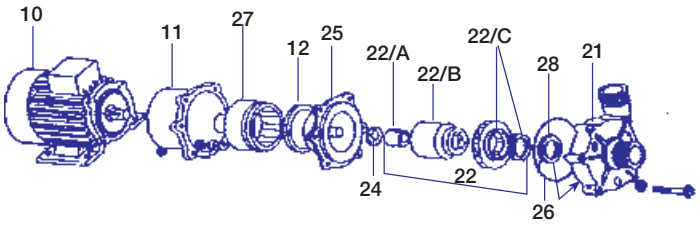

10 Motor
11 Flange
12 Centering Ring (No on MPP251 PP)
27 Drive magnet
25 Rear casing with shaft
24 Thrust Ring
22 Impeller assembly
22A Impeller bush
22B Impeller magnet
22C Impeller
28 Bushing guide with thrust ring
26 O-ring
21 Pump casing

Wet-end:
21+22+24+25 +26 = 30

lafonte™.eu

MAGNETIC DRIVE PUMPS

MPP 500 - MPP 501

Operating principle

The distinctive feature of magnetic drive pump is the absence of a connection between motor and pump.
The rotation of the impeller is obtained by the magnetic force between two magnets : one is coupled to the motor, the other drives the impeller.
This construction guaranties the highest reliability and avoids any leackage, so maintenance interventions are reduced and simplified.

The materials used are:

- Polypropylene and PVDF for plastic components.
- Ceramics (Al2 O3 99,7%) for shaft and thrust ring.
- Rulon for bearings
- EPDM or Viton for the O-ring.

CE

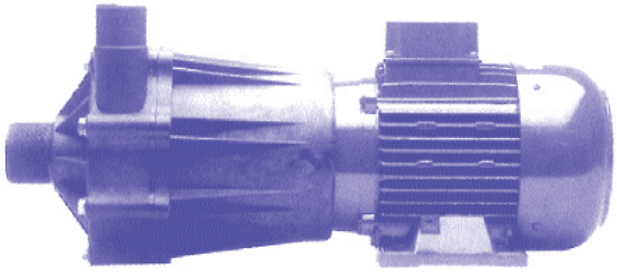

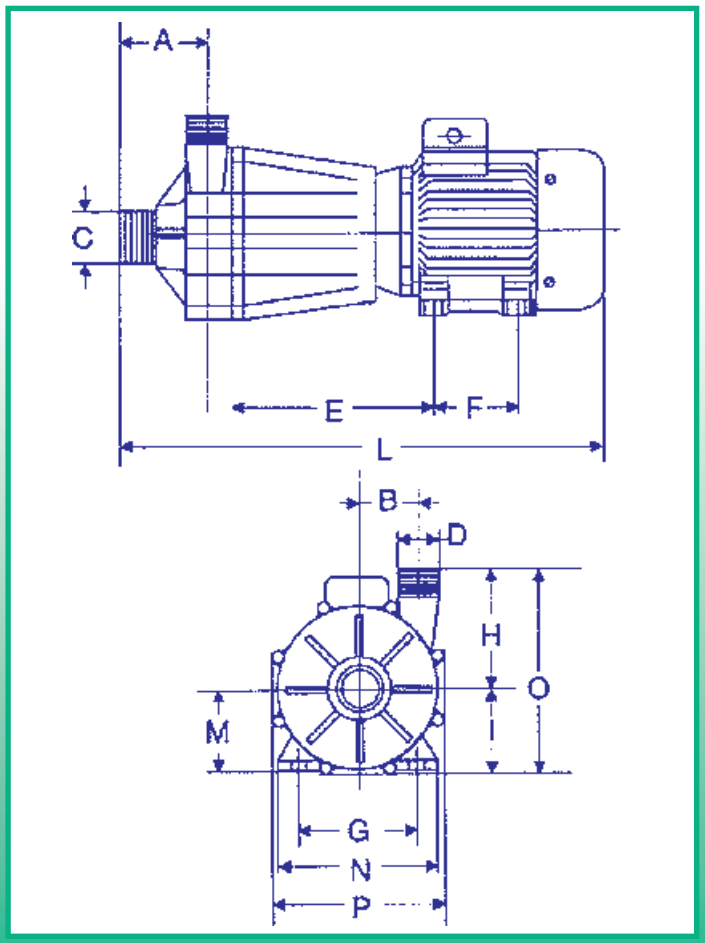

MODEL	MPP 500	- MPP 501
A	106	106
B	63,5	63,5
C	2”	2”
D	1”1/2	1” 1/2
E	245,5	245,5
F	125	125
G	140	140
H	137,5	137,5
I	100	100
L	565	565
M	90	90
N	184	184
O	237,5	267,5
P	200	200
KW	2,2	3
PHASES	3	3
Rpm	2800/3450	2800/3450
KG	21,5	24

MPP 500 - MPP 501

M A G N E T I C D R I V E P U M P S

MPP 500 — 50Hz

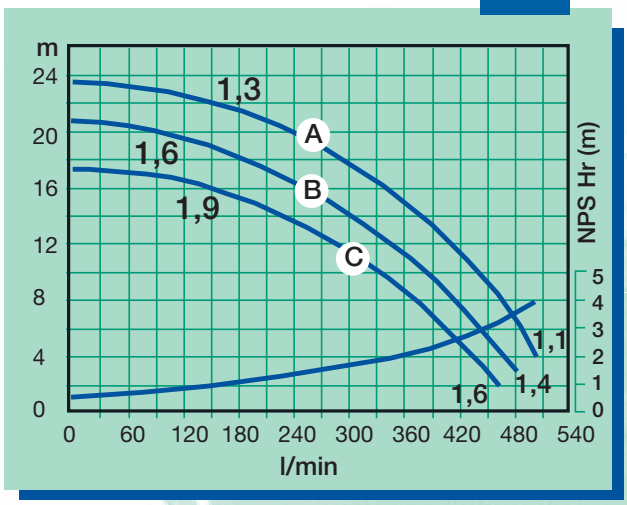

MPP 501 — 50Hz

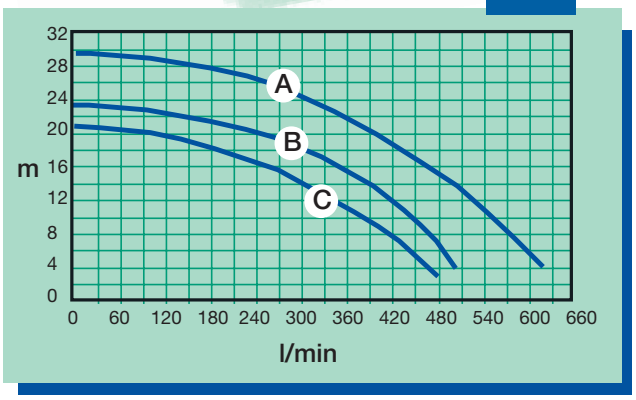

DIRECTIVES:

- The pump should never run dry.
- Dirty liquids and crystals reduce the life of the bearings.
- The ambient temperature should bebetween 0 and 40 °C.
- Flame proof motors should be used in explosive atmospheres.
- The liquid should not crystallize in the pump.
- The maximum temperature of the pumped liquid should be: 70 °C (for PP) 95 °C (for PVDF)
- The pump is normal priming.

MPP 500 - MPP 501 — 60Hz

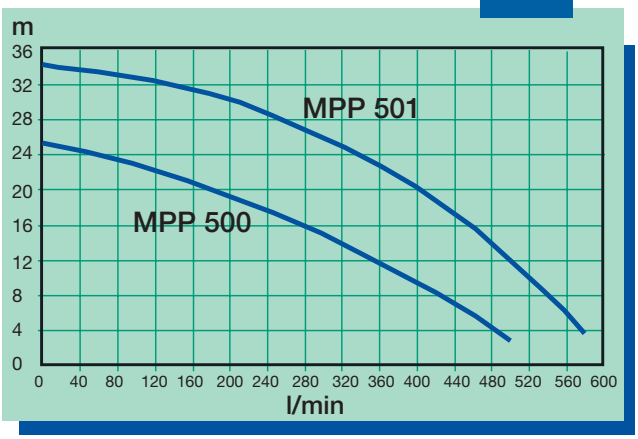

Curve references:
water at ambient temperature

EXPLODED VIEW MAGNETIC DRIVE PUMP

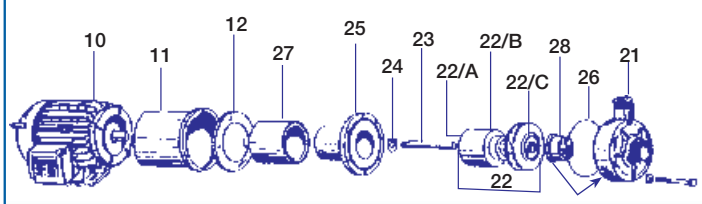

10 Motor	22 Impeller assembly	
11 Flange	22A Impeller bush	
12 Centering Ring	22B Impeller magnet	Wet-end:
27 Drive magnet	22C Impeller	21+22+23+24+25
25 Rear casing	28 Bushing guide with thrust ring	+26+28 = 30
24 Thrust ring	26 O-ring	
23 Shaft	21 Pump casing	

lafonte™.eu

MAGNETIC DRIVE PUMPS

MPP 831 - MPP 951

Operating principle

The distinctive feature of magnetic drive pump is the absence of a connection between motor and pump. The rotation of the impeller is obtained by the magnetic force between two magnets : one is coupled to the motor, the other drives the impeller.
This construction guaranties the highest reliability and avoids any leackage, so maintenance interventions are reduced and simplified.

The materials used are:

- Polypropylene and PVDF for plastic components.
- Ceramics (Al2 O3 99,7%) for shaft and thrust ring.
- Rulon for bearings
- EPDM or Viton for the O-ring.

CE

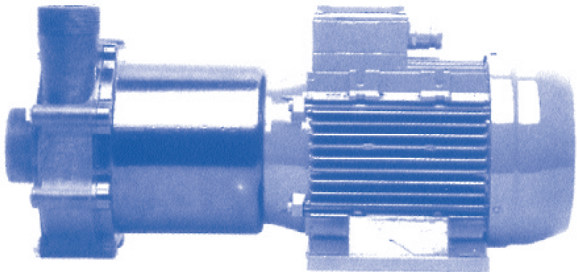

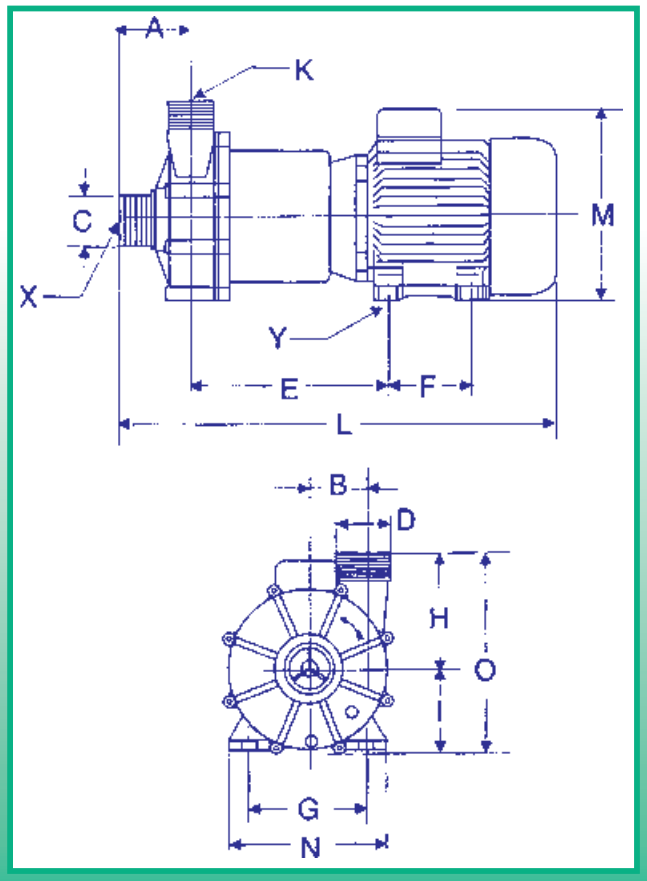

MODEL	MPP 831	MPP 951
A	70	70
B	75	75
C	2” 3/4	2” 3/4
D	2” 1/4	2” 1/4
E	270	270
F	140	140
G	190	190
H	150	150
I	112	112
L	587*	587*
M	266*	266*
N	228*	228*
O	264	264
K	Ø 50	Ø 50
X	Ø 65	Ø 65
Y	Ø n°4 Ø12	Ø n°4 Ø12
KW	4	5,5 KW*
PHASES	3	3
Rpm	2800/3450	2800/3450
KG	34,6*	37,800*

* It changes according to the assembled motor

MPP 831 - MPP 951

M A G N E T I C D R I V E P U M P S

MPP 831 — 50Hz

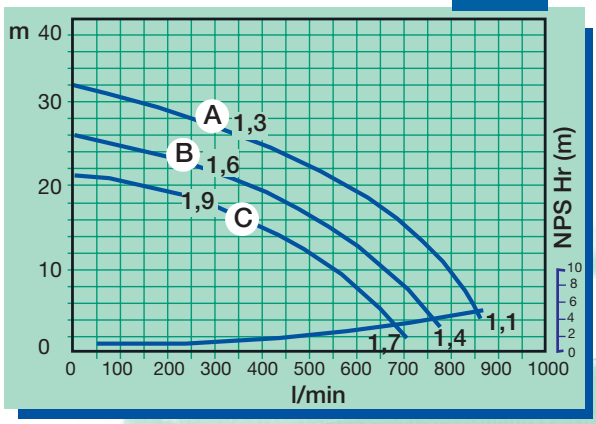

MPP 951 — 50Hz

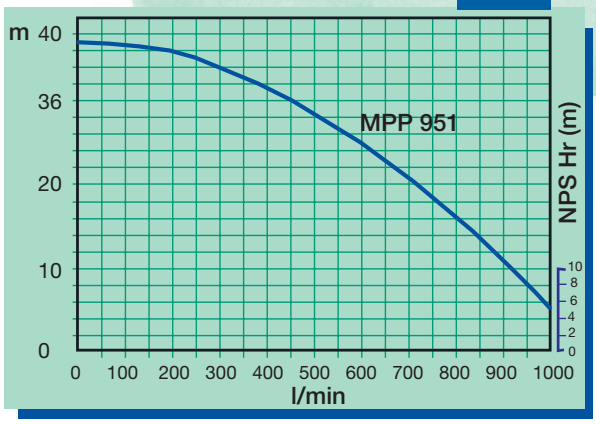

MPP 831 - MPP 951 — 60Hz

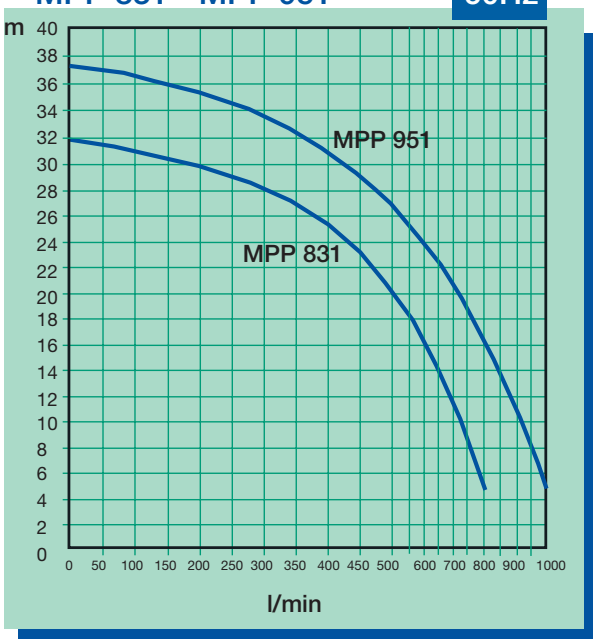

Curve references:
water at ambient temperature

DIRECTIVES:

- The pump should never run dry.
- Dirty liquids and crystals reduce the life of the bearings.
- The ambient temperature should be between 0 and 40 °C.
- Flame proof motors should be used in explosive atmospheres.
- The liquid should not crystallize in the pump.
- The maximum temperature of the pumped liquid should be: 70 °C (for PP) 95 °C (for PVDF)
- The pump is normal priming.

EXPLODED VIEW MAGNETIC DRIVE PUMP

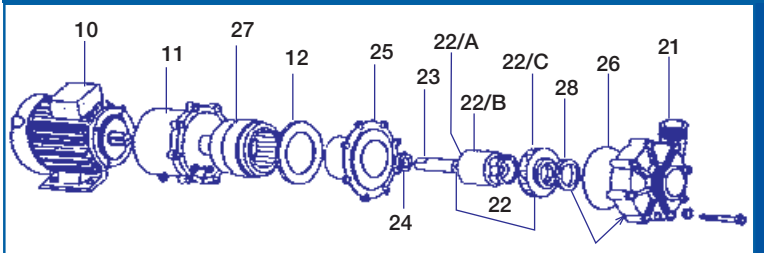

10	Motor	22	Impeller assembly
11	Flange	22/A	Impeller bush
27	Drive magnet	22/B	Impeller Magnet
12	Centring Ring	22/C	Impeller
25	Rear casing	28	Bushing guide with thrust ring
24	Thrust ring	26	O. R.
23	Shaft	21	Pump casing

Wet end :
21+22+23+24+25
+26+28 = 30

Since 1975 processing Corrosive Solutions

lafonte.eu®

Mechanical seal PUMPS

evm8

MECHANICAL SEAL PUMPS

ADVANTAGES

- Easy Maintenace Operations
- Energy saving

FEATURES

- External Mechanical Seal available with different material combinations
- Tmax exercise: PP 75°C - PVDF 95°C
- Connections:
  - socket union for rigid piping connection with PP, PVC, PVDF union ends choice
  - hose barb for hose connetcions
  - flanged

APPLICATION FIELDS

- Acid and alkaline soutions with minimal solid sospended particles
- Electroplating, Chemical, PCB industry

SPECIFICATIONS

	Flow Rate max (l/min.)	Head max (m)	Motor (kw)	IN/OUT D (mm)	T max (°C)	Weight* (kg)
50 Hz	485	23	2,20	63 x 50	PP: 75	PP: 22,00
60 Hz	485	23	2,20	63 x 50	PVDF: 95	PVDF: 25,00

* It depends on the motor

CONNECTION TYPE B

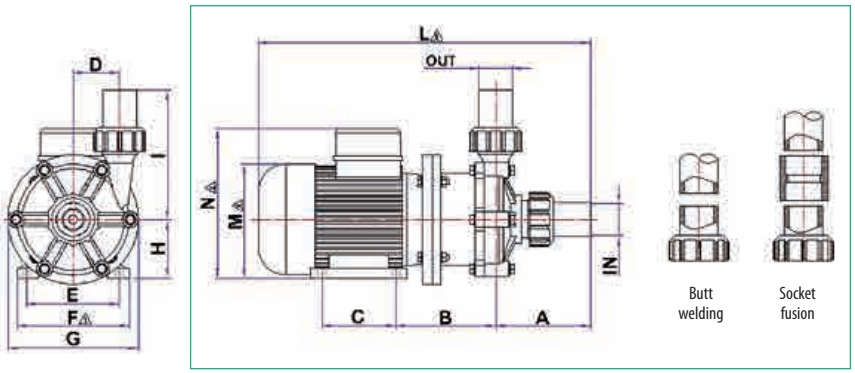

CONNECTION TYPE P

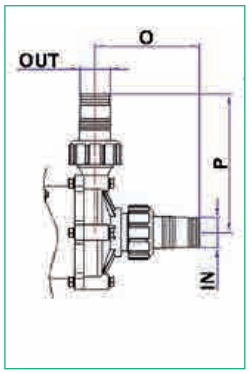

CONNECTION TYPE F

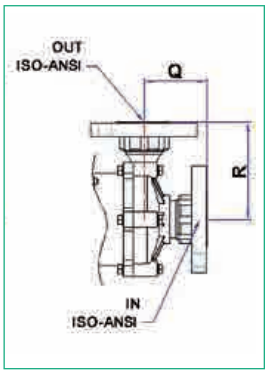

Dimensions:

Mod.	A	B	C	D	E	F⚠	G	H	I	L⚠	M⚠	N⚠	O	P	Q	R	IN	OUT
EVM8	108	174	90	65	112	136	195	71	155	446	137	170	143,0	200	67	125	40	32

⚠ It changes according with motor supplier

PUMP IDENTIFICATION						
Model	Pump body	Shaft	Mechanical seal Rotating - Static	O-Ring	Connections	Motor / rpm
EVM 8	P = PP F = PVDF M = solid PP	X = AISI 316 T = TITANIO H = HASTELLOI	2 = PTFE CERAMIC 3 = CARBON - CERAMIC 4 = SIC - SIC 5 = CARBON - SIC 6 = SIC - CERAMIC	E = EPDM V = VITON	B = Socket union F = Flanged P = Hosebarb	A = 50 Hz / 2800 B = 60 Hz / 3400
EVM 8	**P**	**X**	**3**	**E**	**B**	**A**

Performance Curve 50 Hz - Rpm 2800

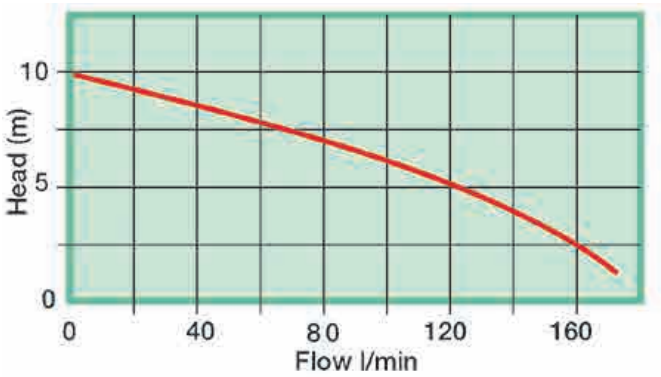

Performance Curve 60 Hz - Rpm 3400

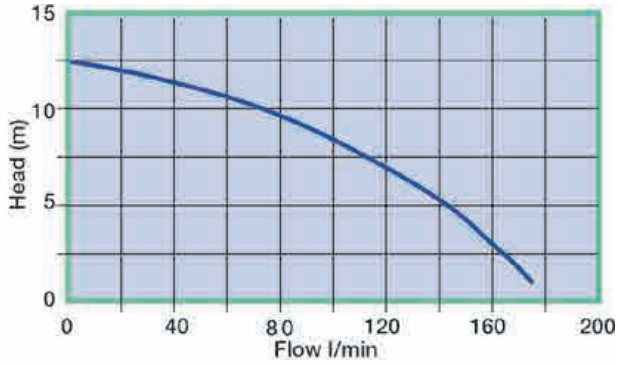

Curves referr to water T = 20°C

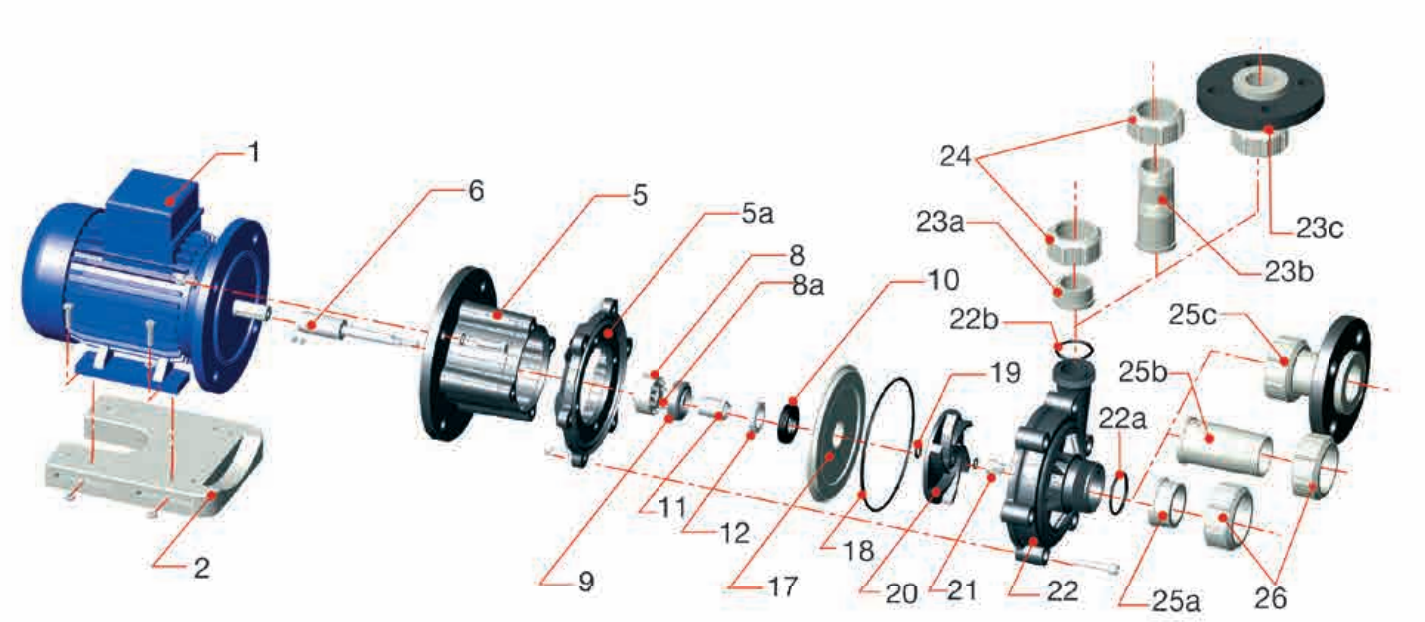

1	Motor	12	Static ring	23a	Rigid piping discharg attack
2	Motor Base	17	Pump housing flange	23b	Hosebarb discharge attack
5	Bracket	18	Pump housing O-Ring	23c	Flanged suction attack
5a	Flange Bracket	19	Impeller O-Ring	24	Discharge gear
6	Shaft	20	Impeller	25	Suction manifold
8	Mechanical seal body	21	Ogive nut	25a	Rigid piping discharge attack
8a	Mechanical seal springs	22	Pump body	25b	Hosebarb discharge attack
9	Rotating ring	22a	Suction pump body O-Ring	25c	Flanged suction attack
10	O-Ring	22b	Discharge pump body O-Ring	26	Suction gear
11	Shaft sleeve	23	Discharge maniford		

LAFONTE.EU may modify data any time, without notice, in order to get product enhancement

evm12

MECHANICAL SEAL PUMPS

ADVANTAGES

- Easy Maintenace Operations
- Energy saving

FEATURES

- External Mechanical Seal available with different material combinations
- Tmax exercise: PP 75°C - PVDF 95°C
- Connections:
  - socket union for rigid piping connection with PP, PVC, PVDF union ends choice
  - hose barb for hose connetcions
  - flanged

APPLICATION FIELDS

- Acid and alkaline soutions with minimal solid sospended particles
- Electroplating, Chemical, PCB industry

SPECIFICATIONS

	Flow Rate max (l/min.)	Head max (m)	Motor (kw)	IN/OUT D (mm)	T max (°C)	Weight* (kg)
50 Hz	485	23	2,20	63 x 50	PP: 75	PP: 22,00
60 Hz	485	23	2,20	63 x 50	PVDF: 95	PVDF: 25,00

* It depends on the motor

CONNECTION TYPE B

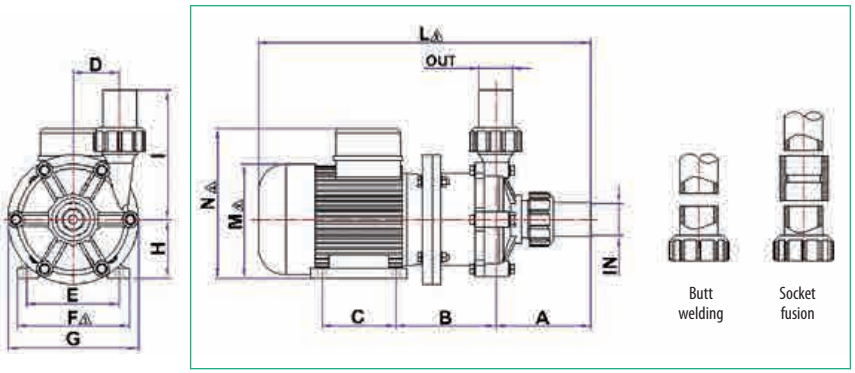

CONNECTION TYPE P

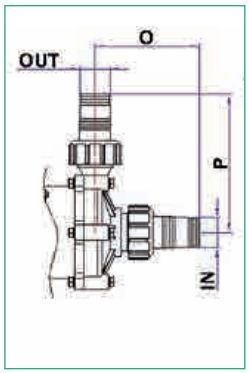

CONNECTION TYPE F

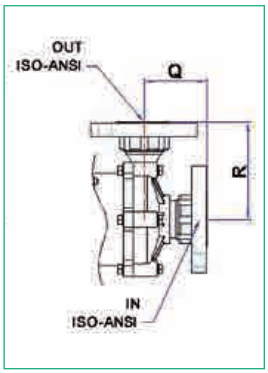

Dimensions:

Mod.	A	B	C	D	E	F⚠	G	H	I	L⚠	M⚠	N⚠	O	P	Q	R	IN	OUT
EVM12	108	174	90	65	112	136	195	71	155	446	137	170	153,0	200	67	125	50	32

⚠ It changes according with motor supplier

PUMP IDENTIFICATION						
Model	Pump body	Shaft	Mechanical seal Rotating - Static	O-Ring	Connections	Motor / rpm
EVM 12	P = PP F = PVDF	X = AISI 316 T = TITANIO H = HASTELLOI	2 = PTFE CERAMIC 3 = CARBON - CERAMIC 4 = SIC - SIC 5 = CARBON - SIC 6 = SIC - CERAMIC	E = EPDM V = VITON	B = Socket union F = Flanged P = Hosebarb	A = 50 Hz / 2800 B = 60 Hz / 3400
EVM 12	**P**	**X**	**3**	**E**	**B**	**A**

Performance Curve 50 Hz - Rpm 2800

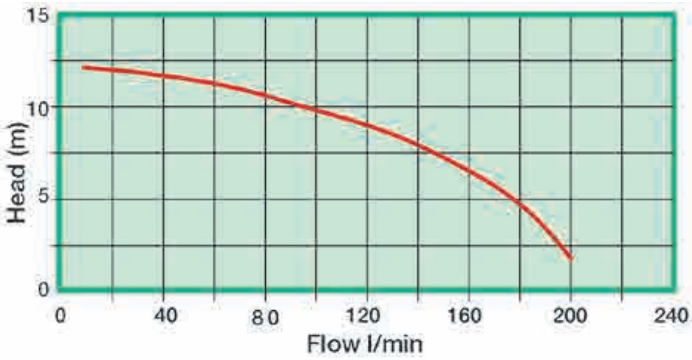

Performance Curve 60 Hz - Rpm 3400

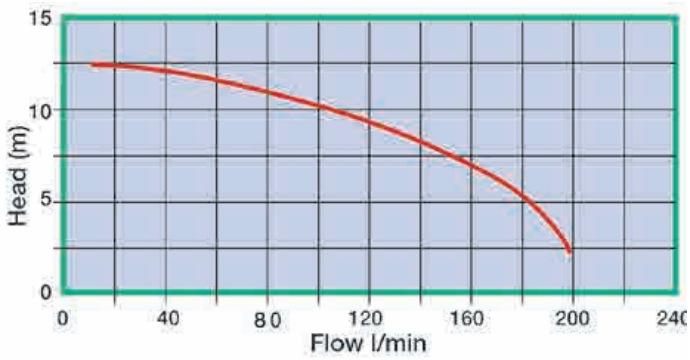

Curves referr to water T = 20°C

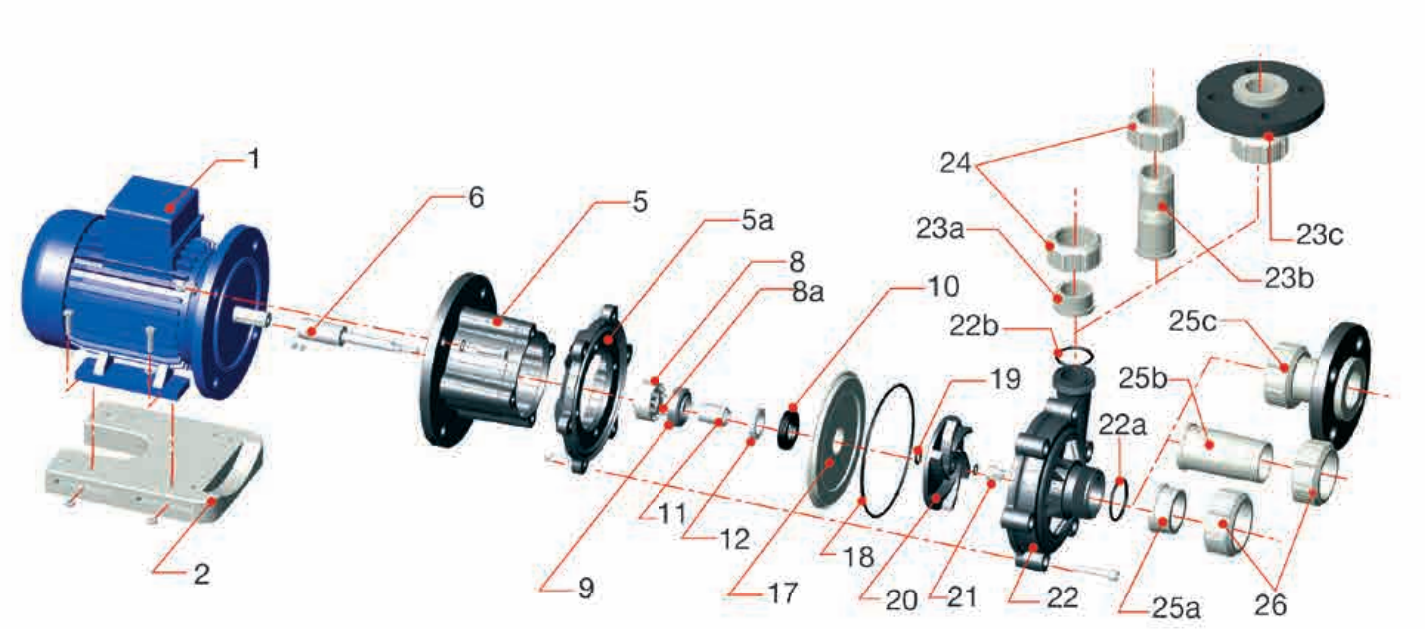

1	Motor	12	Static ring	23a	Rigid piping discharg attack
2	Motor Base	17	Pump housing flange	23b	Hosebarb discharge attack
5	Bracket	18	Pump housing O-Ring	23c	Flanged suction attack
5a	Flange Bracket	19	Impeller O-Ring	24	Discharge gear
6	Shaft	20	Impeller	25	Suction manifold
8	Mechanical seal body	21	Ogive nut	25a	Rigid piping discharge attack
8a	Mechanical seal springs	22	Pump body	25b	Hosebarb discharge attack
9	Rotating ring	22a	Suction pump body O-Ring	25c	Flanged suction attack
10	O-Ring	22b	Discharge pump body O-Ring	26	Suction gear
11	Shaft sleeve	23	Discharge maniford		

LAFONTE.EU may modify data any time, without notice, in order to get product enhancement

evm15

MECHANICAL SEAL PUMPS

ADVANTAGES

- Easy Maintenace Operations
- Energy saving

FEATURES

- External Mechanical Seal available with different material combinations
- Tmax exercise: PP 80°C - PVDF 98°C
- Connections:
  - socket union for rigid piping connection with PP, PVC, PVDF union ends choice
  - hose barb for hose connetcions
  - flanged

APPLICATION FIELDS

- Acid and alkaline soutions with minimal solid sospended particles
- Electroplating, Chemical, PCB industry

SPECIFICATIONS

	Flow Rate max (l/min.)	Head max (m)	Motor (kw)	IN/OUT D (mm)	T max (°C)	Weight* (kg)
50 Hz	485	23	2,20	63 x 50	PP: 80	PP: 22,00
60 Hz	485	23	2,20	63 x 50	PVDF: 98	PVDF: 25,00

* It depends on the motor

CONNECTION TYPE B

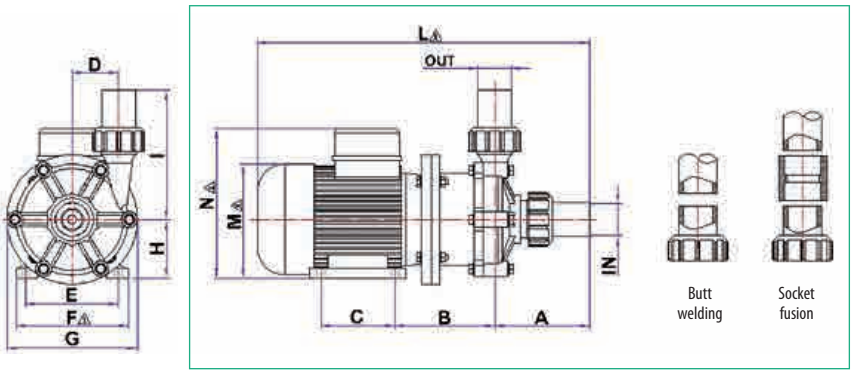

CONNECTION TYPE P

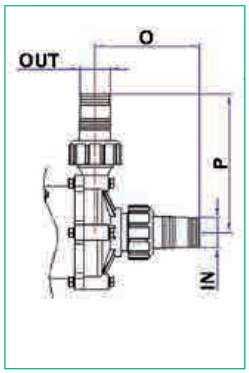

CONNECTION TYPE F

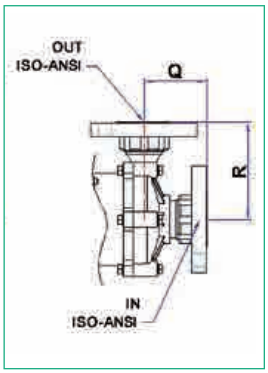

Dimensions:

Mod.	A	B	C	D	E	F⚠	G	H	I	L⚠	M⚠	N⚠	O	P	Q	R	IN	OUT
EVM15	108	174	90	65	112	136	195	71	155	446	137	170	153,0	210	67	125	50	40

⚠ It changes according with motor supplier

PUMP IDENTIFICATION						
Model	Pump body	Shaft	Mechanical seal Rotating - Static	O-Ring	Connections	Motor / rpm
EVM 15	P = PP F = PVDF	X = AISI 316 T = TITANIO H = HASTELLOI	2 = PTFE CERAMIC 3 = CARBON - CERAMIC 4 = SIC - SIC 5 = CARBON - SIC 6 = SIC - CERAMIC	E = EPDM V = VITON	B = Socket union F = Flanged P = Hosebarb	A = 50 Hz / 2800 B = 60 Hz / 3400
EVM 15	**P**	**X**	**3**	**E**	**B**	**A**

Performance Curve 50 Hz - Rpm 2800

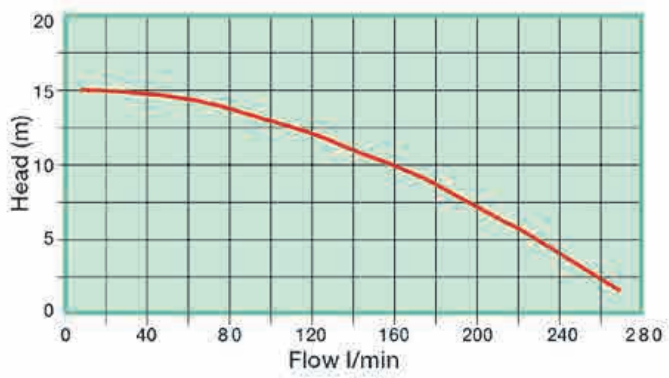

Performance Curve 60 Hz - Rpm 3400

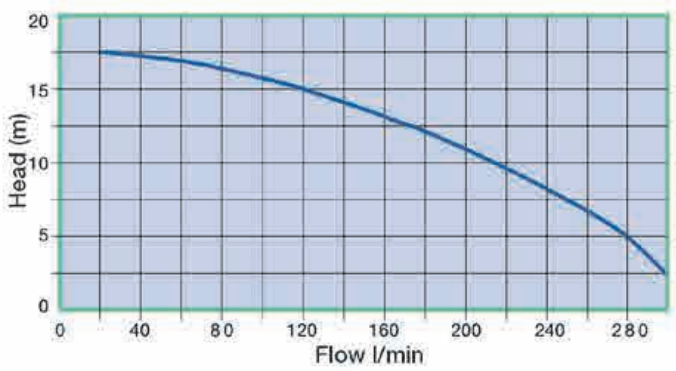

Curves referr to water T = 20°C

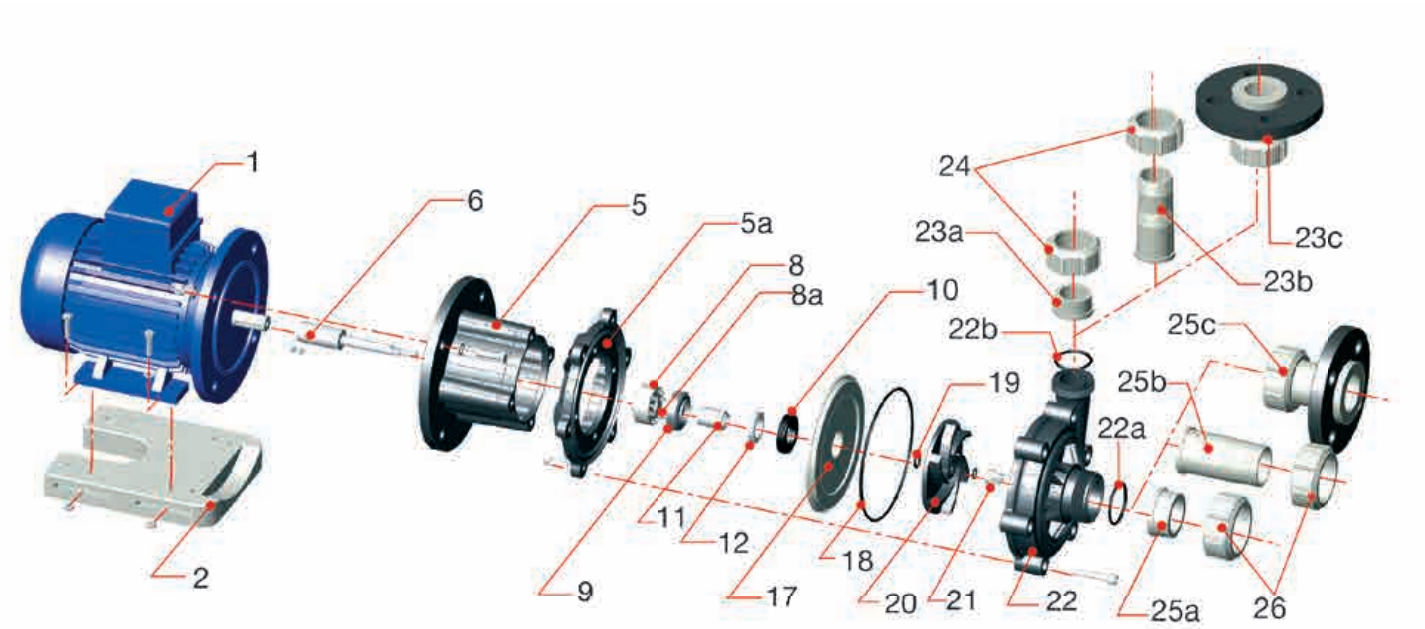

1	Motor	12	Static ring	23a	Rigid piping discharg attack
2	Motor Base	17	Pump housing flange	23b	Hosebarb discharge attack
5	Bracket	18	Pump housing O-Ring	23c	Flanged suction attack
5a	Flange Bracket	19	Impeller O-Ring	24	Discharge gear
6	Shaft	20	Impeller	25	Suction manifold
8	Mechanical seal body	21	Ogive nut	25a	Rigid piping discharge attack
8a	Mechanical seal springs	22	Pump body	25b	Hosebarb discharge attack
9	Rotating ring	22a	Suction pump body O-Ring	25c	Flanged suction attack
10	O-Ring	22b	Discharge pump body O-Ring	26	Suction gear
11	Shaft sleeve	23	Discharge maniford		

LAFONTE.EU may modify data any time, without notice, in order to get product enhancement

evm20

MECHANICAL SEAL PUMPS

ADVANTAGES

- Easy Maintenace Operations
- Energy saving

FEATURES

- External Mechanical Seal available with different material combinations
- Tmax exercise: PP 75°C - PVDF 95°C
- Connections:
  - socket union for rigid piping connection with PP, PVC, PVDF union ends choice
  - hose barb for hose connetcions
  - flanged

APPLICATION FIELDS

- Acid and alkaline soutions with minimal solid sospended particles
- Electroplating, Chemical, PCB industry

SPECIFICATIONS

	Flow Rate max (l/min.)	Head max (m)	Motor (kw)	IN/OUT D (mm)	T max (°C)	Weight* (kg)
50 Hz	485	23	2,20	63 x 50	PP: 75	PP: 22,00
60 Hz	485	23	2,20	63 x 50	PVDF: 95	PVDF: 25,00

* It depends on the motor

CONNECTION TYPE B

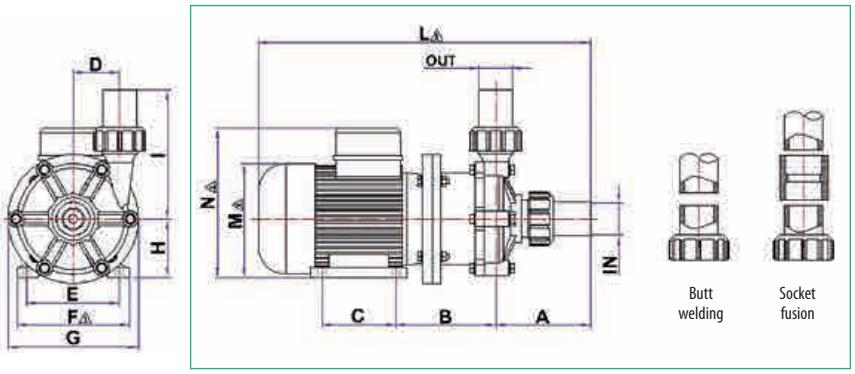

CONNECTION TYPE P

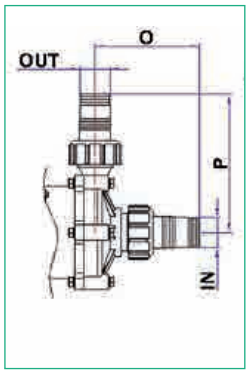

CONNECTION TYPE F

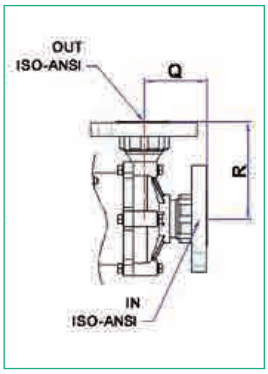

Dimensions:

Mod.	A	B	C	D	E	F⚠	G	H	I	L⚠	M⚠	N⚠	O	P	Q	R	IN	OUT
EVM20	108	179	100	65	125	160	200	80	155	475	156	210	153,0	210	67	125	50	40

⚠ It changes according with motor supplier

PUMP IDENTIFICATION						
Model	Pump body	Shaft	Mechanical seal Rotating - Static	O-Ring	Connections	Motor / rpm
EVM 20	P = PP F = PVDF M = solid PP	X = AISI 316 T = TITANIO H = HASTELLOI	2 = PTFE CERAMIC 3 = CARBON - CERAMIC 4 = SIC - SIC 5 = CARBON - SIC 6 = SIC - CERAMIC	E = EPDM V = VITON	B = Socket union F = Flanged P = Hosebarb	A = 50 Hz / 2800 B = 60 Hz / 3400
EVM 20	**P**	**X**	**3**	**E**	**B**	**A**

Performance Curve 50 Hz - Rpm 2800

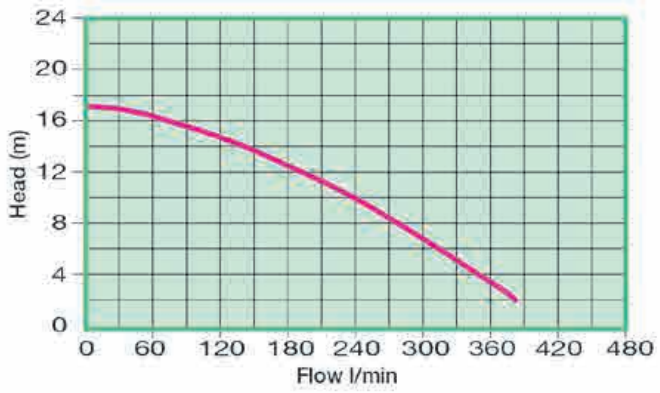

Performance Curve 60 Hz - Rpm 3400

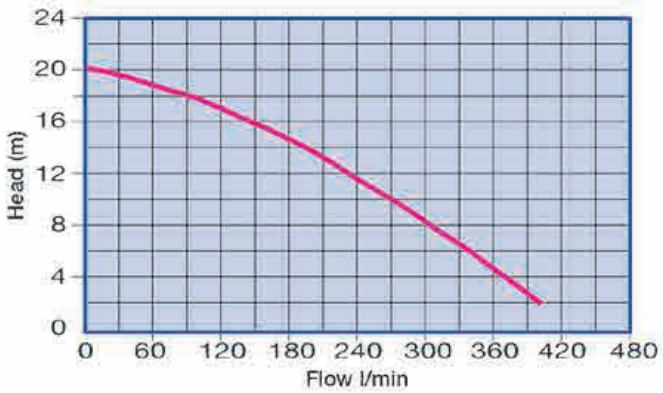

Curves referr to water T = 20°C

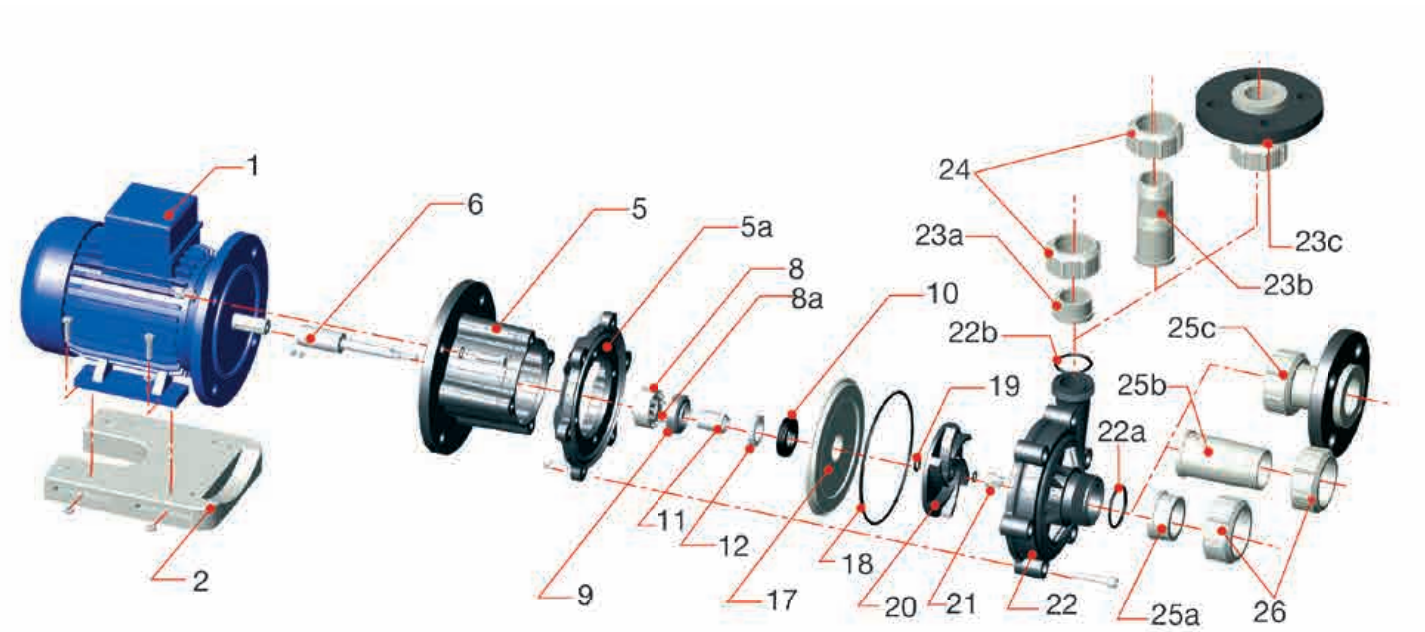

1	Motor	12	Static ring	23a	Rigid piping discharg attack
2	Motor Base	17	Pump housing flange	23b	Hosebarb discharge attack
5	Bracket	18	Pump housing O-Ring	23c	Flanged suction attack
5a	Flange Bracket	19	Impeller O-Ring	24	Discharge gear
6	Shaft	20	Impeller	25	Suction manifold
8	Mechanical seal body	21	Ogive nut	25a	Rigid piping discharge attack
8a	Mechanical seal springs	22	Pump body	25b	Hosebarb discharge attack
9	Rotating ring	22a	Suction pump body O-Ring	25c	Flanged suction attack
10	O-Ring	22b	Discharge pump body O-Ring	26	Suction gear
11	Shaft sleeve	23	Discharge maniford		

LAFONTE.EU may modify data any time, without notice, in order to get product enhancement

evm25

MECHANICAL SEAL PUMPS

ADVANTAGES

- Easy Maintenace Operations
- Energy saving

FEATURES

- External Mechanical Seal available with different material combinations
- Tmax exercise: PP 75°C - PVDF 95°C
- Connections:
  - socket union for rigid piping connection with PP, PVC, PVDF union ends choice
  - hose barb for hose connetcions
  - flanged

APPLICATION FIELDS

- Acid and alkaline soutions with minimal solid sospended particles
- Electroplating, Chemical, PCB industry

SPECIFICATIONS

	Flow Rate max (l/min.)	Head max (m)	Motor (kw)	IN/OUT D (mm)	T max (°C)	Weight* (kg)
50 Hz	485	23	2,20	63 x 50	PP: 75	PP: 22,00
60 Hz	485	23	2,20	63 x 50	PVDF: 95	PVDF: 25,00

* It depends on the motor

CONNECTION TYPE B

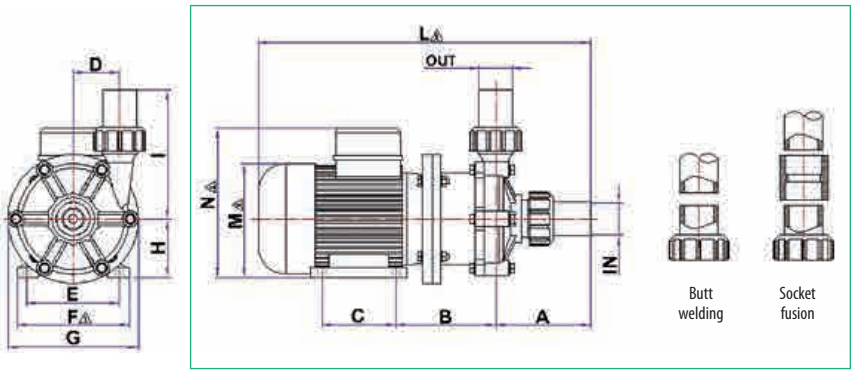

CONNECTION TYPE P

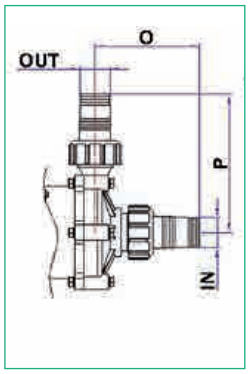

CONNECTION TYPE F

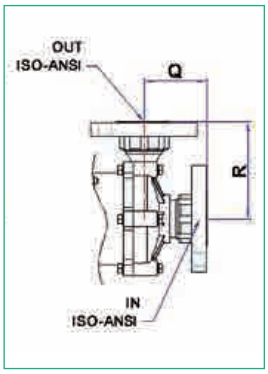

Dimensions:

Mod.	A	B	C	D	E	F⚠	G	H	I	L⚠	M⚠	N⚠	O	P	Q	R	IN	OUT
EVM25	144	226	100	84	140	170	246	90	201	579	176	220	175,0	236	86	160	63	40/50*

⚠ It changes according with motor supplier

*Flanged version

PUMP IDENTIFICATION						
Model	Pump body	Shaft	Mechanical seal Rotating - Static	O-Ring	Connections	Motor / rpm
EVM 25	P = PP F = PVDF	X = AISI 316 T = TITANIO H = HASTELLOI	2 = PTFE CERAMIC 3 = CARBON - CERAMIC 4 = SIC - SIC 5 = CARBON - SIC 6 = SIC - CERAMIC	E = EPDM V = VITON	B = Socket union F = Flanged P = Hosebarb	A = 50 Hz / 2800 B = 60 Hz / 3400
EVM 25	**P**	**X**	**3**	**E**	**B**	**A**

Performance Curve 50 Hz - Rpm 2800

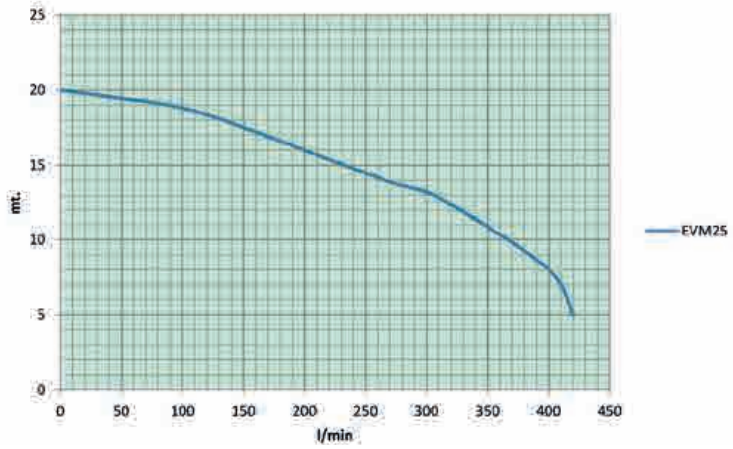

Performance Curve 60 Hz - Rpm 3400

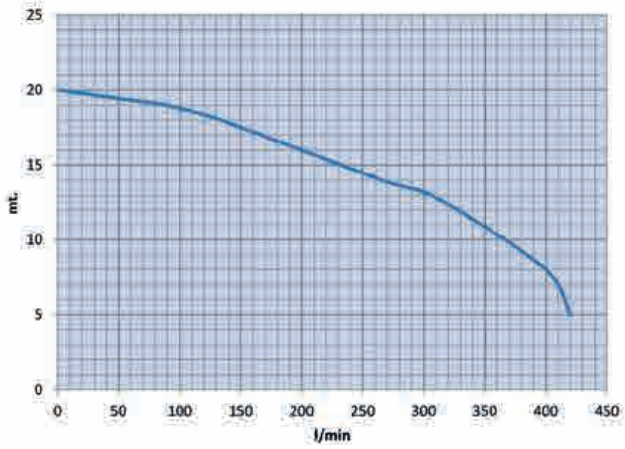

Curves referr to water T = 20°C

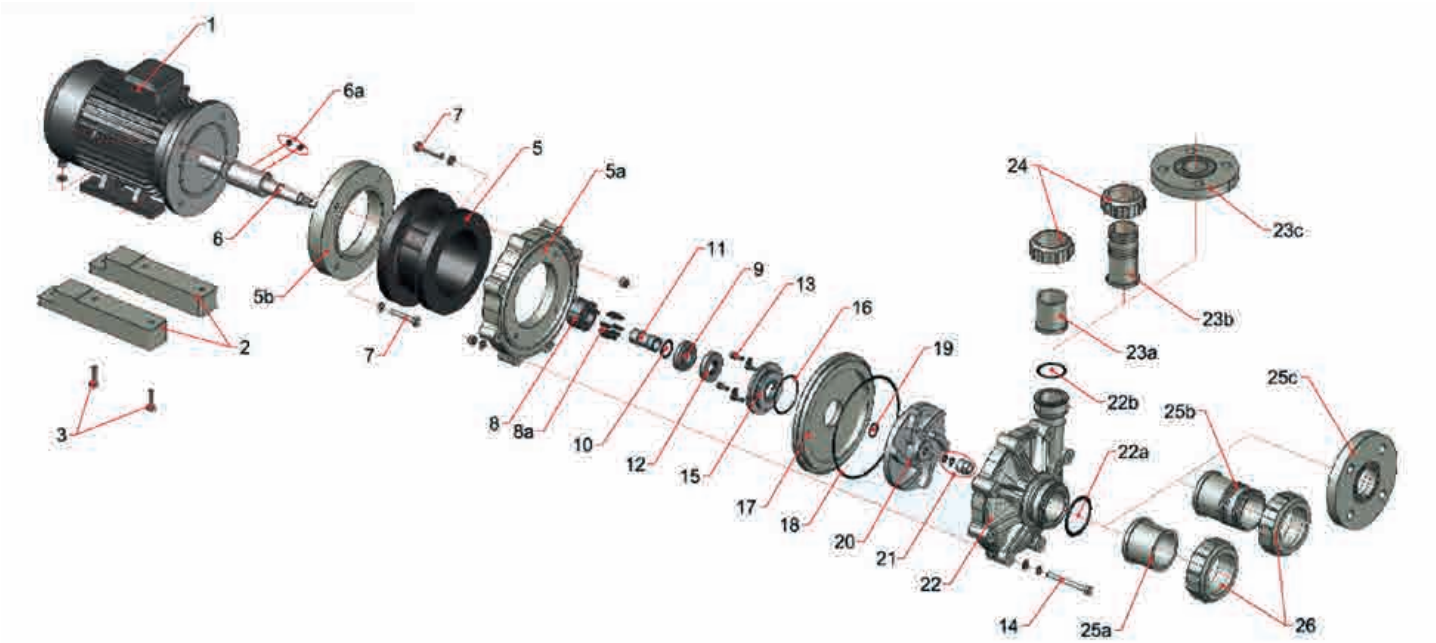

1	Motor	10	O-Ring	18	Pump housing O-Ring
2	Motor Base	11	Shaft sleeve	19	Impeller O-Ring
5	Bracket	12	Static ring	20	Impeller
5a	Flange Bracket	17	Pump housing flange	21	Ogive nut
6	Shaft	13	Mech. seal flange screw	22	Pump body
6a	Grub screw	14	Pump housing screw	23	Discharge maniford
8	Mechanical seal body	15	Mechanical seal flange	24	Discharge gear
8a	Mechanical seal springs	16	Mechanical seal flange O-Ring	25	Suction manifold
9	Rotating ring	17	Pump housing flange	26	Suction gear

LAFONTE.EU may modify data any time, without notice, in order to get product enhancement

evm30

MECHANICAL SEAL PUMPS

ADVANTAGES

- Easy Maintenace Operations
- Energy saving

FEATURES

- External Mechanical Seal available with different material combinations
- Tmax exercise: PP 75°C - PVDF 95°C
- Connections:
  - socket union for rigid piping connection with PP, PVC, PVDF union ends choice
  - hose barb for hose connetcions
  - flanged

APPLICATION FIELDS

- Acid and alkaline soutions with minimal solid sospended particles
- Electroplating, Chemical, PCB industry

SPECIFICATIONS

	Flow Rate max (l/min.)	Head max (m)	Motor (kw)	IN/OUT D (mm)	T max (°C)	Weight* (kg)
50 Hz	485	23	2,20	63 x 50	PP: 75	PP: 22,00
60 Hz	485	23	2,20	63 x 50	PVDF: 95	PVDF: 25,00

* It depends on the motor

CONNECTION TYPE B

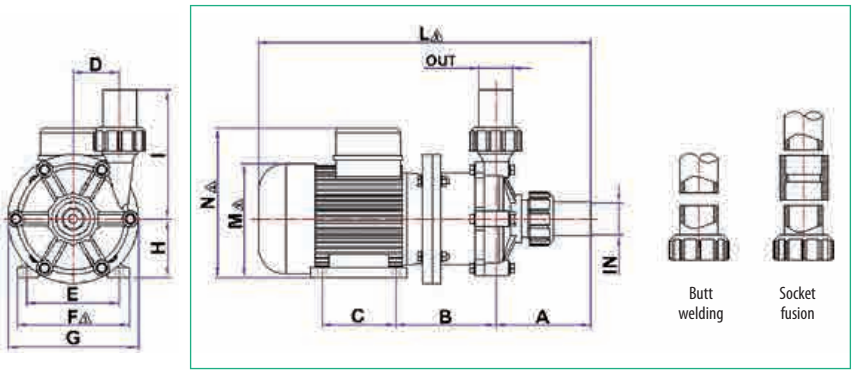

CONNECTION TYPE P

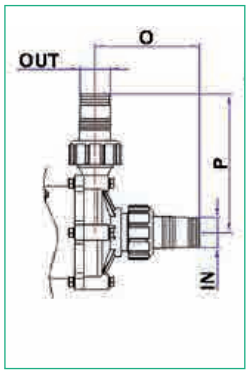

CONNECTION TYPE F

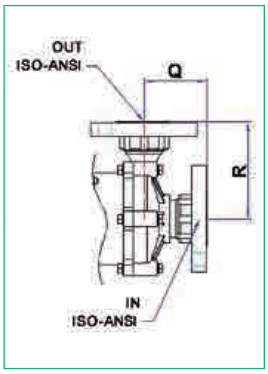

Dimensions:

Mod.	A	B	C	D	E	F⚠	G	H	I	L⚠	M⚠	N⚠	O	P	Q	R	IN	OUT
EVM30	144	226	125	84	140	170	246	90	201	605	176	220	175,0	246	86	160	63	50

⚠ It changes according with motor supplier

PUMP IDENTIFICATION						
Model	Pump body	Shaft	Mechanical seal Rotating - Static	O-Ring	Connections	Motor / rpm
EVM 30	P = PP F = PVDF	X = AISI 316 T = TITANIO H = HASTELLOI	2 = PTFE CERAMIC 3 = CARBON - CERAMIC 4 = SIC - SIC 5 = CARBON - SIC 6 = SIC - CERAMIC	E = EPDM V = VITON	B = Socket union F = Flanged P = Hosebarb	A = 50 Hz / 2800 B = 60 Hz / 3400
EVM 30	**P**	**X**	**3**	**E**	**B**	**A**

Performance Curve 50 Hz - Rpm 2800

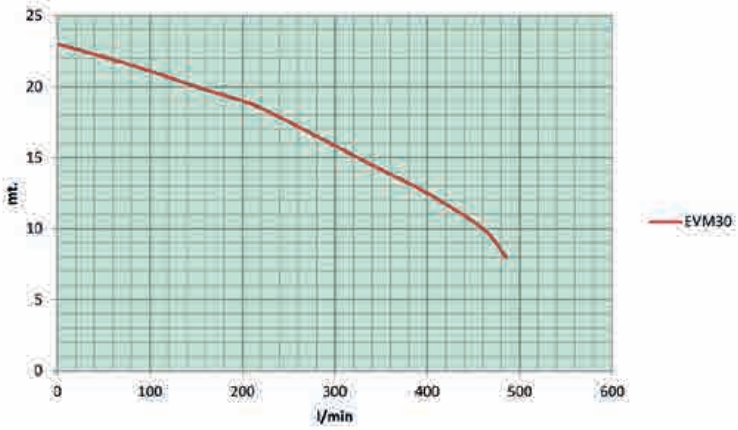

Performance Curve 60 Hz - Rpm 3400

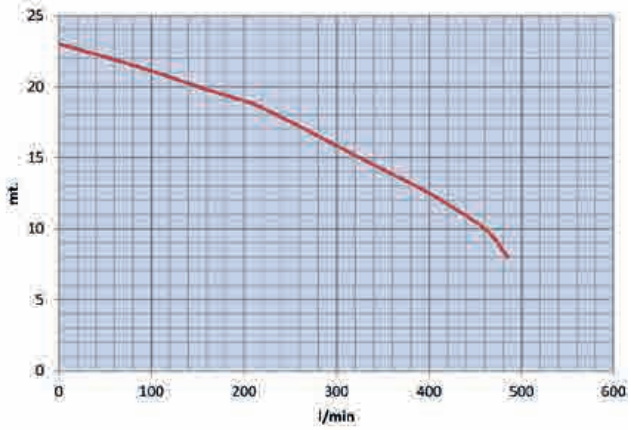

Curves referr to water T = 20°C

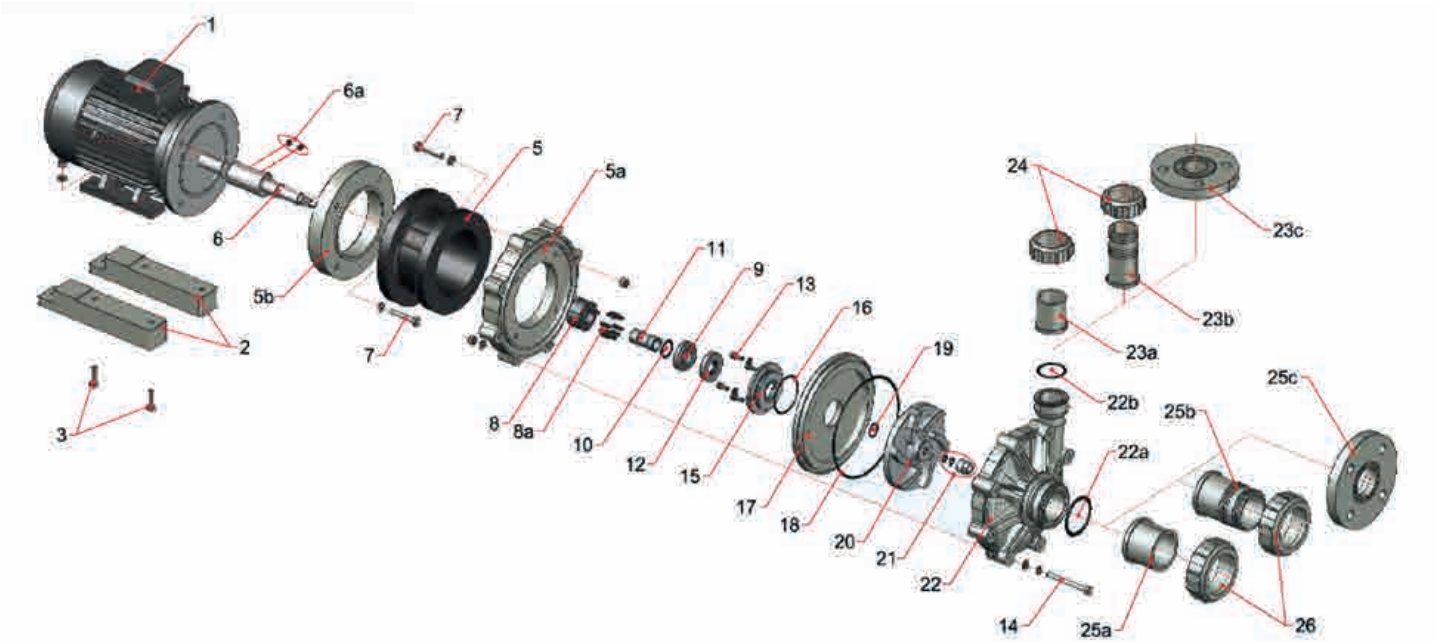

1	Motor	10	O-Ring	18	Pump housing O-Ring
2	Motor Base	11	Shaft sleeve	19	Impeller O-Ring
5	Bracket	12	Static ring	20	Impeller
5a	Flange Bracket	17	Pump housing flange	21	Ogive nut
6	Shaft	13	Mech. seal flange screw	22	Pump body
6a	Grub screw	14	Pump housing screw	23	Discharge maniford
8	Mechanical seal body	15	Mechanical seal flange	24	Discharge gear
8a	Mechanical seal springs	16	Mechanical seal flange O-Ring	25	Suction manifold
9	Rotating ring	17	Pump housing flange	26	Suction gear

LAFONTE.EU may modify data any time, without notice, in order to get product enhancement

03

MECHANICAL SEAL PUMPS

ADVANTAGES

- Easy Maintenance Operations
- Energy saving
- Excellent Chemical Resistance
- Robust Construction

FEATURES

- External Mechanical Seal available with different material combinations
- Tmax exercise: PP75°C - PVDF 95°C - PVC 50°C
- Connections:
  - Threaded
  - Flanged

APPLICATIONS FIELDS

- Acid and alkaline solutions with minimal suspended particles
- Electroplating, Chemical, PCB Industry

03C - 03V - 03P

03M

	Flow Rate max (l/min.)	Head max (m)	Motor	
			(kw)	(HZ)
03A1	380	20	1,5	50/60
03A2	470	20	2,2	50/60
03A3	600	20	4,0	50/60
03B1	550	24	3,0	50/60
03B2	650	24	4,0	50/60
03B3	700	28	5,5	50/60

PUMP IDENTIFICATION						
Model	Pump body	Shaft	Mechanical Seal / Rotating-Static	Oring	Motor/Rpm	Optional
03A1 03A2 03A3 03B1 03B2 03B3	P = PP molded M = PP solid C = PVC V = PVDF	X = SS 316 T = Titanium H = Hastelloy	1 = PTFE/Ceramic 4 = Sic/Carbon 5 = Sic/Sic 6 = Carbon/Ceramic 7 = Sic/Sic with anti-rotation pin	E = EPDM V = Viton	A = 50Hz/2800 B = 60Hz/3400	F = Flange
03B2	**P**	**H**	**6**	**E**	**A**	**F**

Performance Curve 50 Hz - Rpm 2800

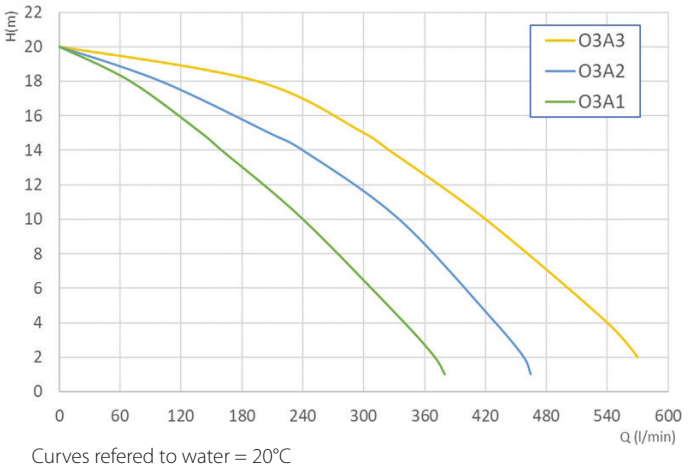

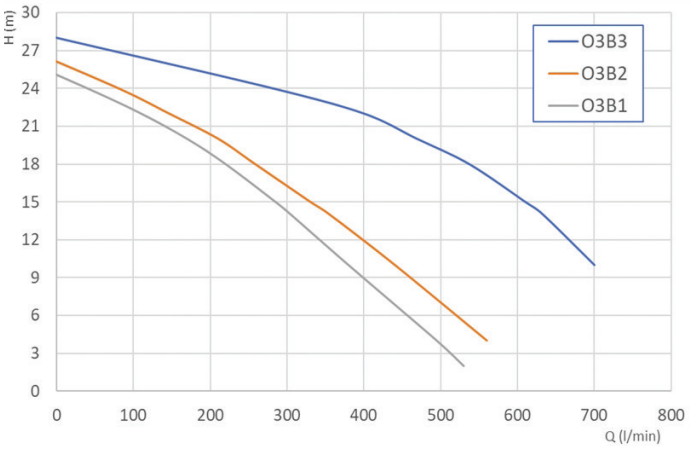

Curves refered to water = 20°C

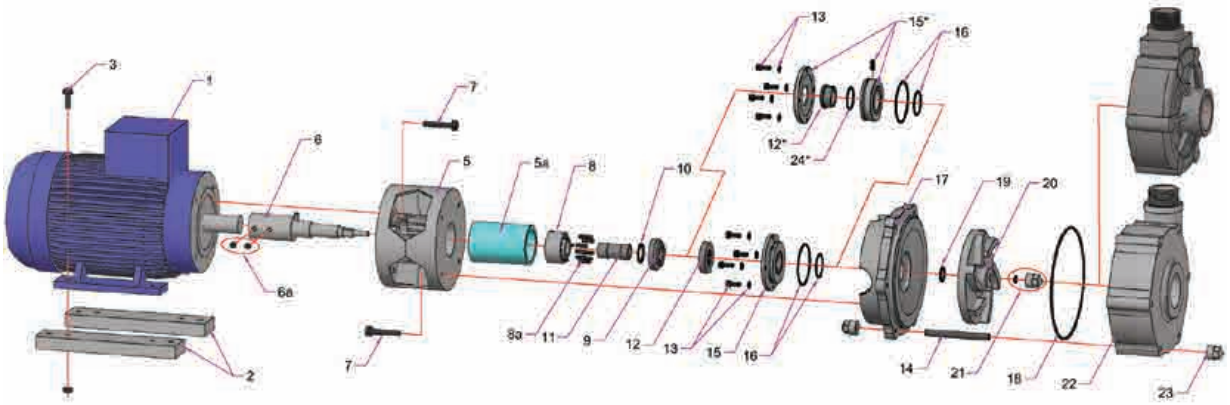

1 Motor
2 PP motor support
3 Motor fixing screw
5 Bracket
5a Bracket
6 Shaft
6a Grub screw
7 Bracket screws
8 Mechanical seal body
8a Spring mechanical seal body
9 Rotating ring
10 O-Ring
11 Shaft cover
12 Stating ring with anti rotation pin
12* Stating ring Long Tail
13 Mechanical seal flange screw
14 Pump housing tie rod
15 Static ring housing
15* Static ring with anti rotation pin housing
16 Static ring housing O-Ring
17 Pump housing flange
18 Pump housing O-Ring
19 Impeller O-Ring
20 Impeller
21 Ogive kit
22 Pump housing
23 Pump housing nut
24* Static ring with anti rotation pin O-Ring

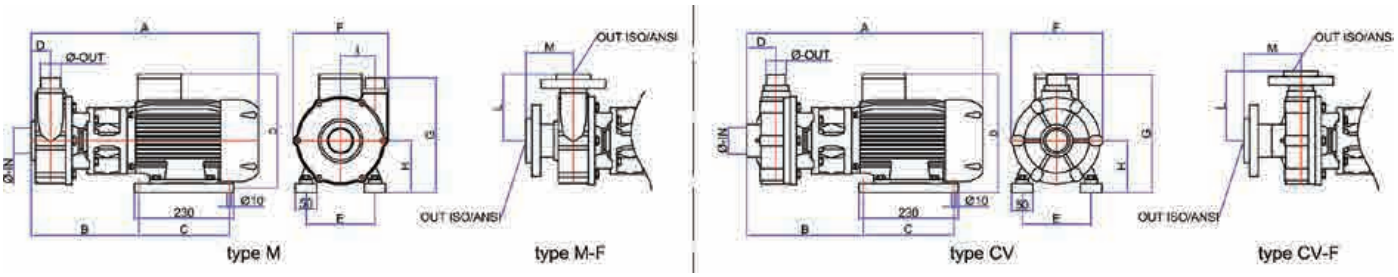

Pump Dimension serie "03"														
MOD.		A	B	C	D	E	F	G	H	I	L	M	Ø-IN	Ø-OUT
O3A1	M	482	233	200	45	140	223	233	110	81	154	110	2"	1"1/2
	CV	502	253		68			253			166	133		
O3A2	M	509	245	200	45	140	223	245	110	81	154	110	2"	1"1/2
	CV	529	265		68			265			166	133		
O3A3	M	534	260	200	45	160	223	260	120	81	154	110	2"	1"1/2
	CV	554	280		68			280			166	133		
O3B1	M	534	260	200	45	160	223	260	120	81	154	110	2"	1"1/2
	CV	554	280		68			280			166	133		
O3B2	M	534	260	200	45	160	223	260	120	81	154	110	2"	1"1/2
	CV	554	280		68			280			166	133		
O3B3	M	545	260	200	45	190	223	260	132	81	154	110	2"1/2	1"1/2
	CV	565	280		68			280			166	133	2"	

LAFONTE.EU may modify data any time, without notice, in order to get product enhancement

04

MECHANICAL SEAL PUMPS

ADVANTAGES

- Easy Maintenance Operations
- Energy saving
- Excellent Chemical Resistance
- Robust Solid Construction

FEATURES

- External Mechanical Seal available with different material combinations
- Tmax exercise: PP75°C - PVDF 95°C - PVC 50°C
- Connection: Flanged

APPLICATIONS FIELDS

- Acid and alkaline solutions with minimal suspended particles
- Electroplating, Chemical, PCB Industry

	Flow Rate max (l/min.)	Head max (m)	Motor	
			(kw)	(HZ)
04B3	840	30	5,5	50/60
04B4	1080	30	7,5	50/60
04B5	1340	30	9,2	50/60
04B7	1850	35	11,0	50/60
04B8	2250	35	15,0	50/60

PUMP IDENTIFICATION						
Model	Pump body	Shaft	Mechanical Seal / Rotating-Static	Oring	Motor/Rpm	Optional
04B3 04B4 04B5 04B7 04B8	P = PP molded C = PVC V = PVDF	X = SS 316 T = Titanium H = Hastelloy	2 = Sic/Carbon 3 = Sic/Sic 5 = Sic/Sic with anti rotation pin	E = EPDM V = Viton	A = 50Hz/2800 B = 60Hz/3400	C = Double Mechanical Seal
04B3	**P**	**H**	**2**	**E**	**A**	**C**

Performance Curve 50 Hz - Rpm 2800

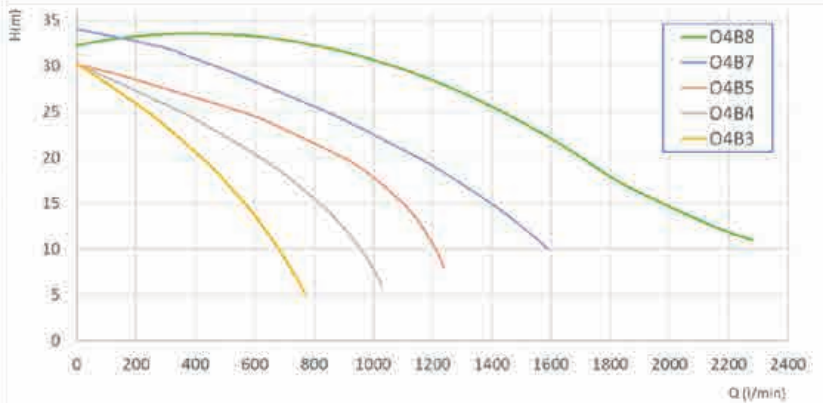

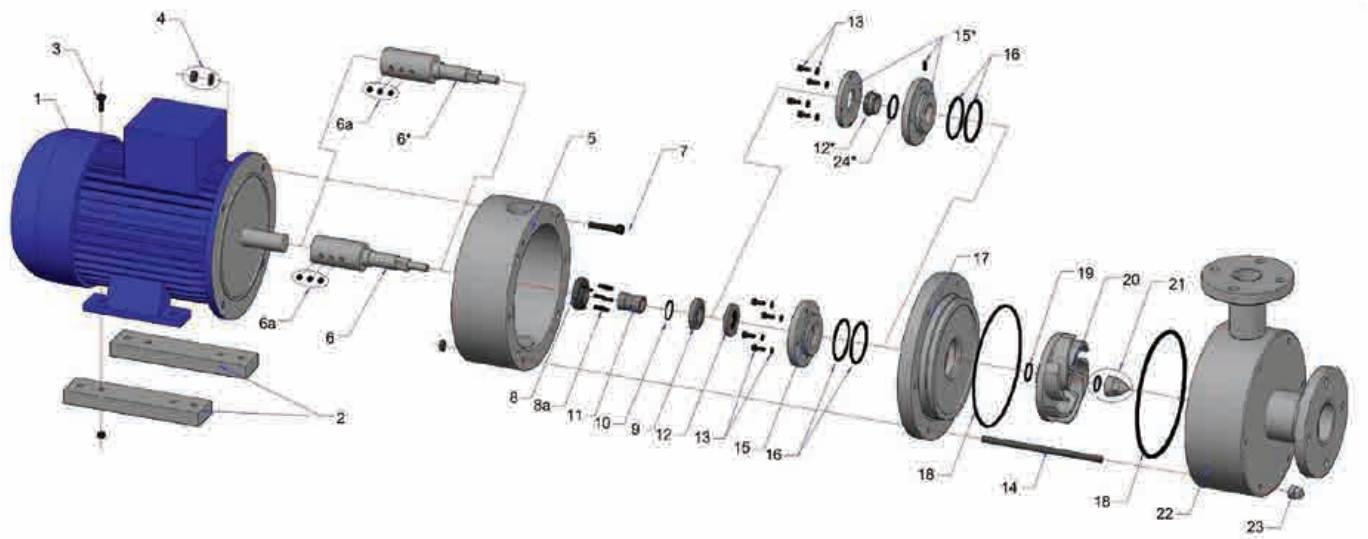

1 Motor
2 PP motor support
3 Motor fixing screw
4 Nut
5 Bracket
6 Shaft
6a Grub screw
7 Bracket screw
8 Mechanical seal body
8a Spring mechanical seal body
9 Rotating ring
10 O-Ring
11 Shaft cover
12 Static ring
12* Stating ring with anti rotation pin
13 Mechanical seal flange screw
14 Pump housing tie rod
15 Static ring housing
15* Static ring housing with anti rotation pin
16 Mech. seal flange O-Ring
17 Pump housing flange
18 Pump housing O-Ring
19 Impeller O-Ring
20 Impeller
21 Ogive kit
22 Pump housing
23 Pump housing nut
24* Static ring anti rotation ring Oring

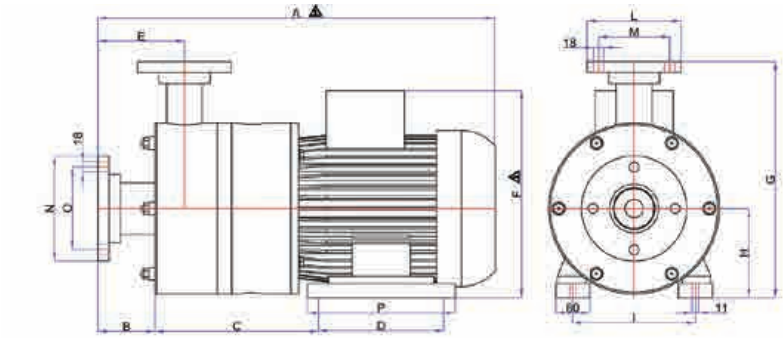

Pump Dimension serie "04"																
MOD	A	B	C	D	E	F	G	H	I	L	M	N	O	P	Ø-IN	Ø-OUT
O4B3	697	100	288	220	152	364	415	157	216	165	125	185	145	260	2"½	2
O4B4	697	100	288	220	152	364	415	157	216	165	125	185	145	260	2"½	2
O4B5	737	100	288	258	152	364	415	157	216	185	145	200	160	298	3"	2"½
O4B7	737	100	288	258	152	364	415	157	216	185	145	200	160	298	3"	2"½
O4B8	737	100	288	258	152	364	415	157	256	200	160	230	190	298	4"	3"

LAFONTE.EU may modify data any time, without notice, in order to get product enhancement

Since 1975 processing Corrosive Solutions

lafonte.eu®

Vertical PUMPS

POMPE VERTICALI

VERTICAL PUMPS

evv 8

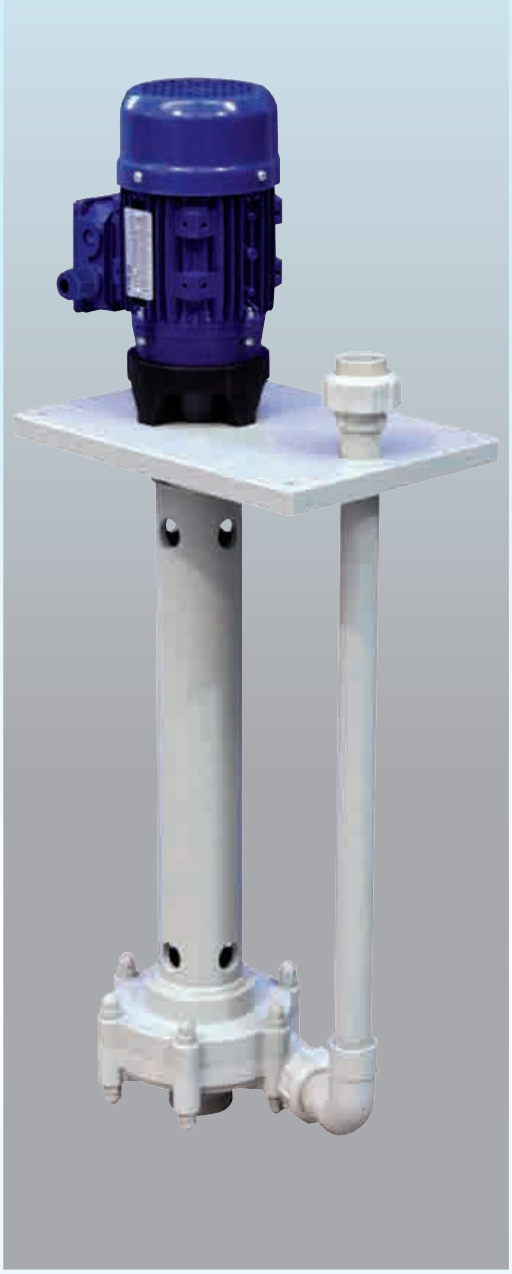

ESPLOSO
EXPLODED VIEW

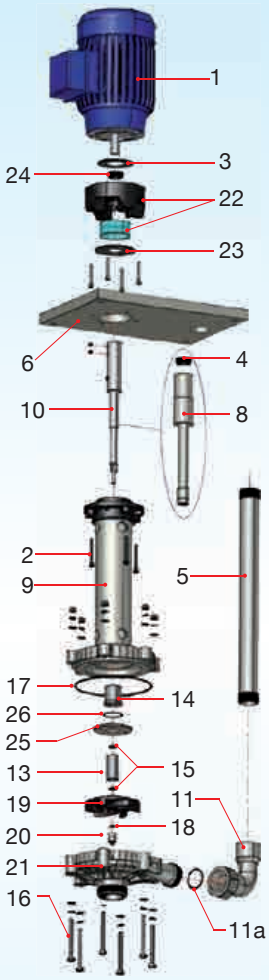

Descrizione particolari			
1	Motore	15	O-Ring bussola
2	Viti	16	Viti corp. pompa
3	Deflettore	17	O-Ring corpo p.
4	Anello tenuta	18	O-Ring ogiva
5	Mandata	19	Girante
6	Piastra	20	Ogiva
8	Rivest. albero	21	Corpo pompa
9	Colonna	22	Lanterna
10	Albero	23	Deflettore
11	Gomito	24	Anello tenuta
11a	O-Ring gomito	25	Ghiera bussola
13	Bussola rotante	26	O-Ring ghiera
14	Bussola statica		

Part. description			
1	*Motor*	*15*	*Bush O-Ring*
2	*Screw*	*16*	*Pump housing bolts*
3	*Baffe*	*17*	*Pump housing O-Ring*
4	*Seal ring*	*18*	*Ogive O-Ring*
5	*Discharge pipe*	*19*	*Impeller*
6	*Support flange*	*20*	*Ogive*
8	*Shaft sleeve*	*21*	*Pump housing*
9	*Pump column*	*22*	*Vapour seal housing*
10	*Shaft*	*23*	*Baffe*
11	*Elbow*	*24*	*Seal ring*
11a	*Elbow O-Ring*	*25*	*Bushing nut*
13	*Rotating bush*	*26*	*O-Ring nut*
14	*Stating bushing*		

DATI TECNICI
SPECIFICATION

	Portata max l/m	Prevalenza max m	Motore KW	IN/OUT D mm	T max esercizio °C	Peso Kg
	Maximum capacity l/m	*Total head*	*Motor KW*	*IN/OUT D mm*	*T max exercise °C*	*Weight * Kg*
50 Hz	160	10	0,37	50 x 32	PP = 75°C PVDF = 95°C	PP = 13,5 ÷ 17,5 * PVDF = 16,5 ÷ 24,5
60 Hz	170	12	0,37			

* Può variare in conformità al motore utilizzato ed alla profondità della pompa.

* *It changes according with motor supplier and pump depth.*

POMPE VERTICALI
VERTICAL PUMPS

EVV 8

DIMENSIONI
DIMENSION

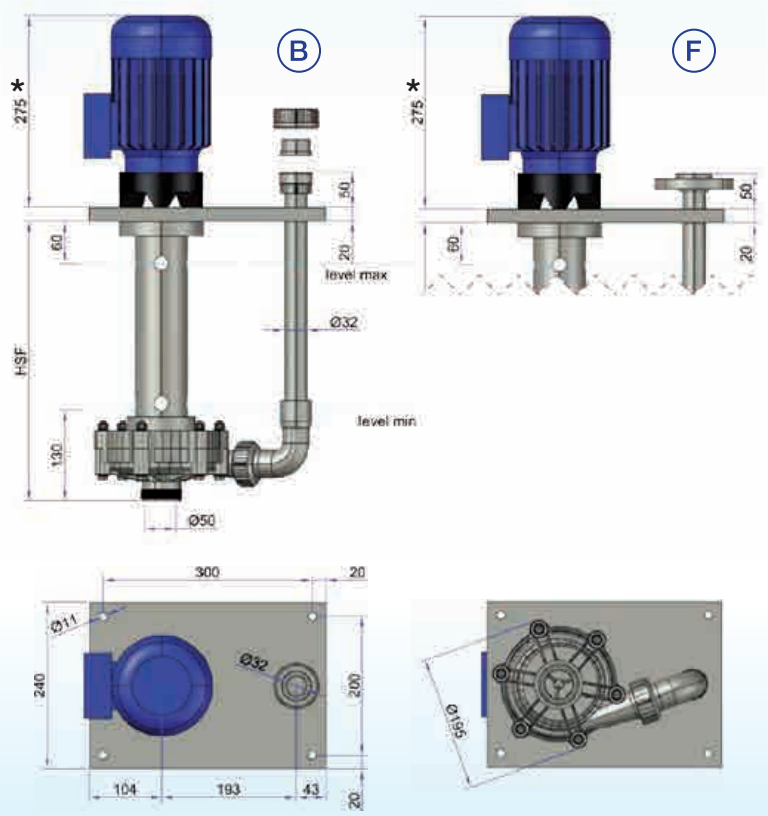

* Può variare in conformità al motore utilizzato

* *It changes according with motor supplier*

CURVE
PERFORMANCE

50 Hz - Rpm 2800

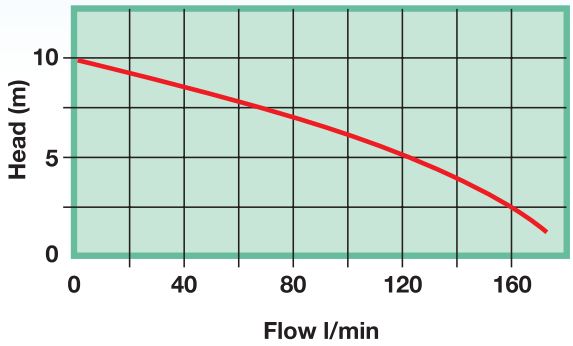

60 Hz - Rpm 3450

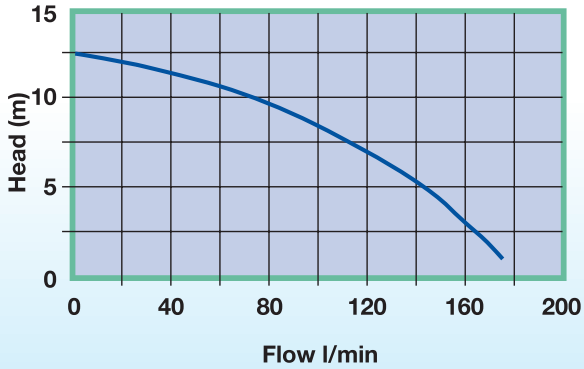

Riferimenti curve: acqua a temperatura ambiente
Curve references: water at room temperature

IDENTIFICAZIONE POMPA / *PUMP IDENTIFICATION*

Modello *Model*	Corpo pompa *Pump body*	Albero *Shaft*	Coppia di bussole statica/rotante *Bushing couple static/rotating*	HSF mm *DEPTH mm*	Attacchi *Connections*	Motore *Motor*	Optional *Option*
EVV8	P=PP F=PVDF	X= INOX AISI316 T= TITANIO *TITANIUM* H= HASTELLOY	1 = PTFE/PTFE 2 = PTFE/GRAFITE *PTFE/CARBON* 3 = PTFE/SIC 4 = GRAFITE/SIC *CARBON/SIC* 6 = GRAFITE/GRAFITE *CARBON/CARBON*	04 = 400 05 = 500 06 = 600 07 = 700 08 = 800 09 = 900 10 = 1.000 11 = 1.100 12 = 1.200 13 = 1.300 14 = 1.400 15 = 1.500	B= Bocchettoni *Socket union* F= Flangiati *Flanged*	A= 50HZ Rpm 2800 B= 60 HZ Rpm 3450	S= Succhieruola *Strainer* L= Lanterna Vapori *Fume seal* B= Bussola intermedia *Additional bushing couple*
EVV8	**P**	**X**	**3**	**06**	**B**	**A**	**L**

POMPE VERTICALI

VERTICAL PUMPS

evv 12

ESPLOSO
EXPLODED VIEW

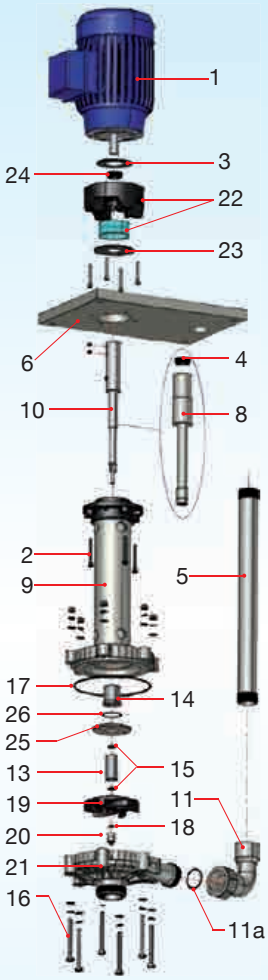

Descrizione particolari			
1	Motore	15	O-Ring bussola
2	Viti	16	Viti corp. pompa
3	Deflettore	17	O-Ring corpo p.
4	Anello tenuta	18	O-Ring ogiva
5	Mandata	19	Girante
6	Piastra	20	Ogiva
8	Rivest. albero	21	Corpo pompa
9	Colonna	22	Lanterna
10	Albero	23	Deflettore
11	Gomito	24	Anello tenuta
11a	O-Ring gomito	25	Ghiera bussola
13	Bussola rotante	26	O-Ring ghiera
14	Bussola statica		

Part. description			
1	*Motor*	*15*	*Bush O-Ring*
2	*Screw*	*16*	*Pump housing bolts*
3	*Baffe*	*17*	*Pump housing O-Ring*
4	*Seal ring*	*18*	*Ogive O-Ring*
5	*Discharge pipe*	*19*	*Impeller*
6	*Support flange*	*20*	*Ogive*
8	*Shaft sleeve*	*21*	*Pump housing*
9	*Pump column*	*22*	*Vapour seal housing*
10	*Shaft*	*23*	*Baffe*
11	*Elbow*	*24*	*Seal ring*
11a	*Elbow O-Ring*	*25*	*Bushing nut*
13	*Rotating bush*	*26*	*O-Ring nut*
14	*Stating bushing*		

DATI TECNICI
SPECIFICATION

	Portata max l/m	Prevalenza max m	Motore KW	IN/OUT D mm	T max esercizio °C	Peso Kg
	Maximum capacity l/m	*Total head*	*Motor KW*	*IN/OUT D mm*	*T max exercise °C*	*Weight Kg* *
50 Hz	200	11,5	0,55	50 x 32	PP = 75°C PVDF = 95°C	PP = 14 ÷ 18 * PVDF =17 ÷ 25
60 Hz	210	13	0,55			

* Può variare in conformità al motore utilizzato ed alla profondità della pompa.

* *It changes according with motor supplier and pump depth.*

POMPE VERTICALI
VERTICAL PUMPS

EVV 12

DIMENSIONI
DIMENSION

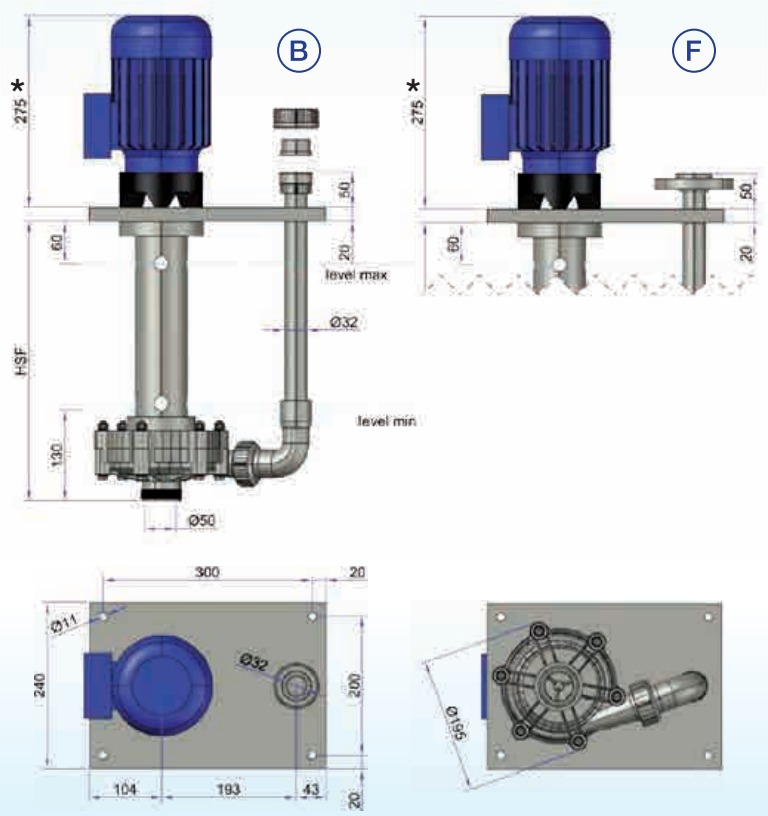

CURVE
PERFORMANCE

50 Hz - Rpm 2800

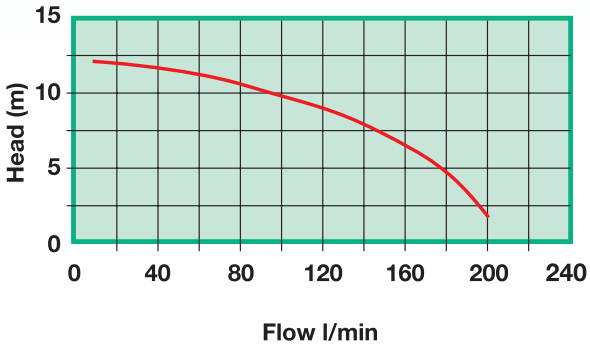

60 Hz - Rpm 3450

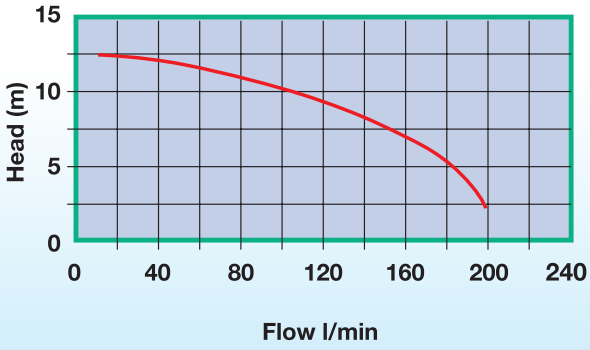

* Può variare in conformità al motore utilizzato

* *It changes according with motor supplier*

Riferimenti curve: acqua a temperatura ambiente
Curve references: water at room temperature

IDENTIFICAZIONE POMPA / *PUMP IDENTIFICATION*

Modello *Model*	Corpo pompa *Pump body*	Albero *Shaft*	Coppia di bussole statica/rotante *Bushing couple static/rotating*	HSF mm *DEPTH mm*	Attacchi *Connections*	Motore *Motor*	Optional *Option*
EVV12	P=PP F=PVDF	X= INOX AISI316 T= TITANIO *TITANIUM* H= HASTELLOY	1 = PTFE/PTFE 2 = PTFE/GRAFITE *PTFE/CARBON* 3 = PTFE/SIC 4 = GRAFITE/SIC *CARBON/SIC* 6 = GRAFITE/GRAFITE *CARBON/CARBON*	04 = 400 05 = 500 06 = 600 07 = 700 08 = 800 09 = 900 10 = 1.000 11 = 1.100 12 = 1.200 13 = 1.300 14 = 1.400 15 = 1.500	B= Bocchettoni *Socket union* F= Flangiati *Flanged*	A= 50HZ Rpm 2800 B= 60 HZ Rpm 3450	S= Succhieruola *Strainer* L= Lanterna Vapori *Fume seal* B= Bussola intermedia *Additional bushing couple*
EVV12	**P**	**X**	**3**	**06**	**B**	**A**	**L**

POMPE VERTICALI

VERTICAL PUMPS

evv 15

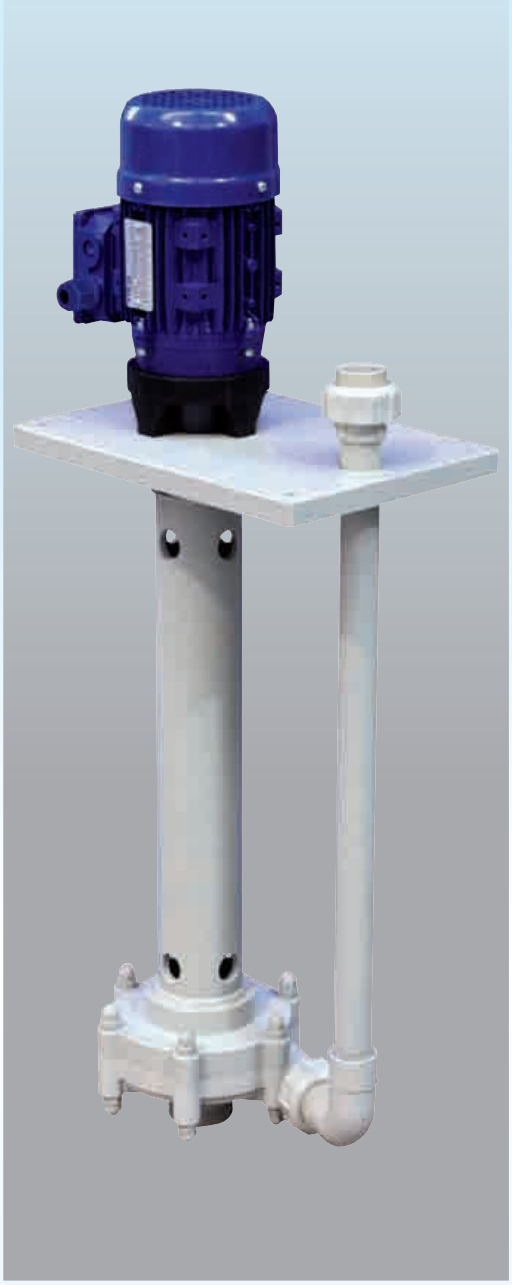

ESPLOSO
EXPLODED VIEW

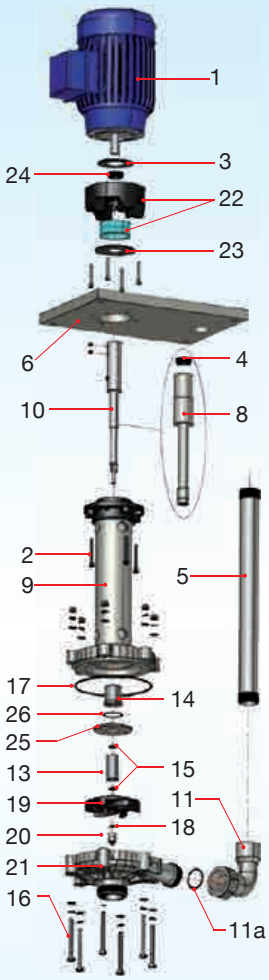

Descrizione particolari			
1	Motore	15	O-Ring bussola
2	Viti	16	Viti corp. pompa
3	Deflettore	17	O-Ring corpo p.
4	Anello tenuta	18	O-Ring ogiva
5	Mandata	19	Girante
6	Piastra	20	Ogiva
8	Rivest. albero	21	Corpo pompa
9	Colonna	22	Lanterna
10	Albero	23	Deflettore
11	Gomito	24	Anello tenuta
11a	O-Ring gomito	25	Ghiera bussola
13	Bussola rotante	26	O-Ring ghiera
14	Bussola statica		

Part. description			
1	*Motor*	*15*	*Bush O-Ring*
2	*Screw*	*16*	*Pump housing bolts*
3	*Baffe*	*17*	*Pump housing O-Ring*
4	*Seal ring*	*18*	*Ogive O-Ring*
5	*Discharge pipe*	*19*	*Impeller*
6	*Support flange*	*20*	*Ogive*
8	*Shaft sleeve*	*21*	*Pump housing*
9	*Pump column*	*22*	*Vapour seal housing*
10	*Shaft*	*23*	*Baffe*
11	*Elbow*	*24*	*Seal ring*
11a	*Elbow O-Ring*	*25*	*Bushing nut*
13	*Rotating bush*	*26*	*O-Ring nut*
14	*Stating bushing*		

DATI TECNICI
SPECIFICATION

	Portata max l/m	Prevalenza max m	Motore KW	IN/OUT D mm	T max esercizio °C	Peso Kg
	Maximum capacity l/m	*Total head*	*Motor KW*	*IN/OUT D mm*	*T max exercise °C*	*Weight * Kg*
50 Hz	270	15	0,70	50 x 40	PP = 80°C PVDF = 98°C	PP = 14,5 ÷ 18,5* PVDF = 17,5 ÷ 25,5
60 Hz	300	18	0,70			

* Può variare in conformità al motore utilizzato ed alla profondità della pompa.

* *It changes according with motor supplier and pump depth.*

POMPE VERTICALI
VERTICAL PUMPS

EVV 15

DIMENSIONI
DIMENSION

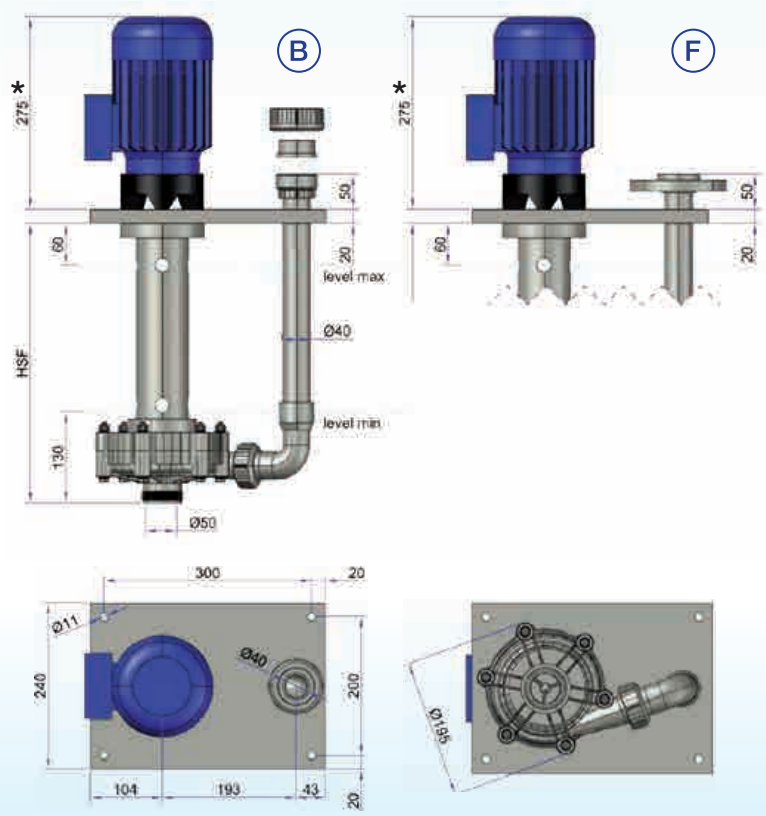

* Può variare in conformità al motore utilizzato

* *It changes according with motor supplier*

CURVE
PERFORMANCE

50 Hz - Rpm 2800

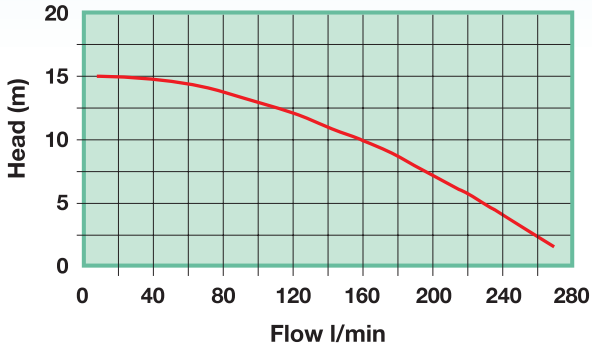

60 Hz - Rpm 3450

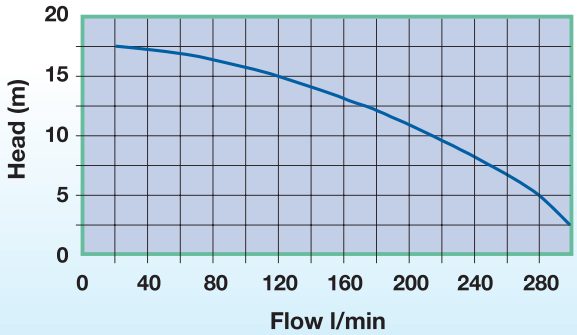

Riferimenti curve: acqua a temperatura ambiente
Curve references: water at room temperature

IDENTIFICAZIONE POMPA / *PUMP IDENTIFICATION*

Modello *Model*	Corpo pompa *Pump body*	Albero *Shaft*	Coppia di bussole statica/rotante *Bushing couple static/rotating*	HSF mm *DEPTH mm*	Attacchi *Connections*	Motore *Motor*	Optional *Option*
EVV15	P=PP F=PVDF	X= INOX AISI316 T= TITANIO *TITANIUM* H= HASTELLOY	1 = PTFE/PTFE 2 = PTFE/GRAFITE *PTFE/CARBON* 3 = PTFE/SIC 4 = GRAFITE/SIC *CARBON/SIC* 6 = GRAFITE/GRAFITE *CARBON/CARBON*	04 = 400 05 = 500 06 = 600 07 = 700 08 = 800 09 = 900 10 = 1.000 11 = 1.100 12 = 1.200 13 = 1.300 14 = 1.400 15 = 1.500	B= Bocchettoni *Socket union* F= Flangiati *Flanged*	A= 50HZ Rpm 2800 B= 60 HZ Rpm 3450	S= Succhieruola *Strainer* L= Lanterna Vapori *Fume seal* B= Bussola intermedia *Additional bushing couple*
EVV15	**P**	**X**	**3**	**06**	**B**	**A**	**L**

POMPE VERTICALI

VERTICAL PUMPS

evv 20

ESPLOSO
EXPLODED VIEW

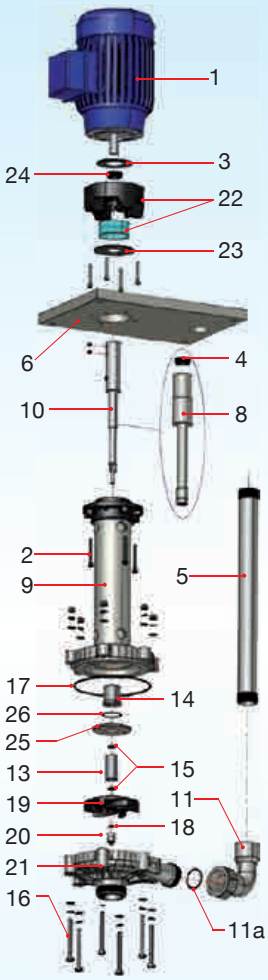

Descrizione particolari			
1	Motore	15	O-Ring bussola
2	Viti	16	Viti corp. pompa
3	Deflettore	17	O-Ring corpo p.
4	Anello tenuta	18	O-Ring ogiva
5	Mandata	19	Girante
6	Piastra	20	Ogiva
8	Rivest. albero	21	Corpo pompa
9	Colonna	22	Lanterna
10	Albero	23	Deflettore
11	Gomito	24	Anello tenuta
11a	O-Ring gomito	25	Ghiera bussola
13	Bussola rotante	26	O-Ring ghiera
14	Bussola statica		

Part. description			
1	*Motor*	*15*	*Bush O-Ring*
2	*Screw*	*16*	*Pump housing bolts*
3	*Baffe*	*17*	*Pump housing O-Ring*
4	*Seal ring*	*18*	*Ogive O-Ring*
5	*Discharge pipe*	*19*	*Impeller*
6	*Support flange*	*20*	*Ogive*
8	*Shaft sleeve*	*21*	*Pump housing*
9	*Pump column*	*22*	*Vapour seal housing*
10	*Shaft*	*23*	*Baffe*
11	*Elbow*	*24*	*Seal ring*
11a	*Elbow O-Ring*	*25*	*Bushing nut*
13	*Rotating bush*	*26*	*O-Ring nut*
14	*Stating bushing*		

DATI TECNICI
SPECIFICATION

	Portata max l/m	Prevalenza max m	Motore KW	IN/OUT D mm	T max esercizio °C	Peso Kg
	Maximum capacity l/m	*Total head*	*Motor KW*	*IN/OUT D mm*	*T max exercise °C*	*Weight * Kg*
50 Hz	370	17	1,1	50 x 40	PP = 75°C PVDF = 95°C	PP = 15,5 ÷ 19,5* PVDF = 18,5 ÷ 26,5
60 Hz	380	20	1,1			

* Può variare in conformità al motore utilizzato ed alla profondità della pompa.

* *It changes according with motor supplier and pump depth.*

POMPE VERTICALI
VERTICAL PUMPS

EVV 20

DIMENSIONI
DIMENSION

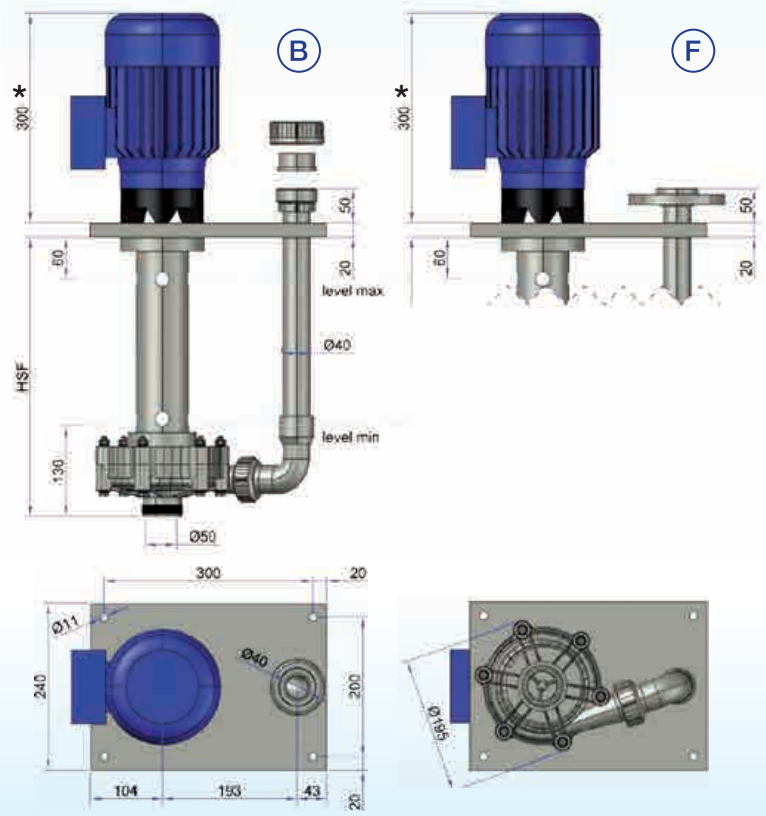

* Può variare in conformità al motore utilizzato

* *It changes according with motor supplier*

CURVE
PERFORMANCE

50 Hz - Rpm 2800

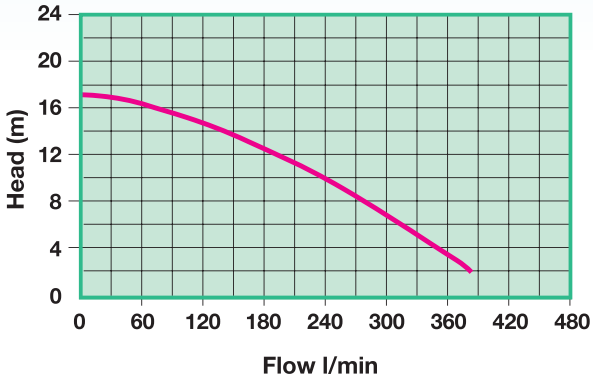

60 Hz - Rpm 3450

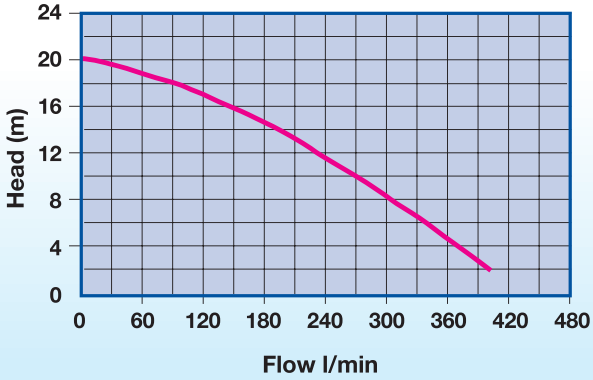

Riferimenti curve: acqua a temperatura ambiente
Curve references: water at room temperature

IDENTIFICAZIONE POMPA / *PUMP IDENTIFICATION*

Modello *Model*	Corpo pompa *Pump body*	Albero *Shaft*	Coppia di bussole statica/rotante *Bushing couple static/rotating*	HSF mm *DEPTH mm*	Attacchi *Connections*	Motore *Motor*	Optional *Option*
EVV20	P=PP F=PVDF	X= INOX AISI316 T= TITANIO *TITANIUM* H= HASTELLOY	1 = PTFE/PTFE 2 = PTFE/GRAFITE *PTFE/CARBON* 3 = PTFE/SIC 4 = GRAFITE/SIC *CARBON/SIC* 6 = GRAFITE/GRAFITE *CARBON/CARBON*	04 = 400 05 = 500 06 = 600 07 = 700 08 = 800 09 = 900 10 = 1.000 11 = 1.100 12 = 1.200 13 = 1.300 14 = 1.400 15 = 1.500	B= Bocchettoni *Socket union* F= Flangiati *Flanged*	A= 50HZ Rpm 2800 B= 60 HZ Rpm 3450	S= Succhieruola *Strainer* L= Lanterna Vapori *Fume seal* B= Bussola intermedia *Additional bushing couple*
EVV20	**P**	**X**	**3**	**06**	**B**	**A**	**L**

POMPE VERTICALI

VERTICAL PUMPS

evv 25

ESPLOSO
EXPLODED VIEW

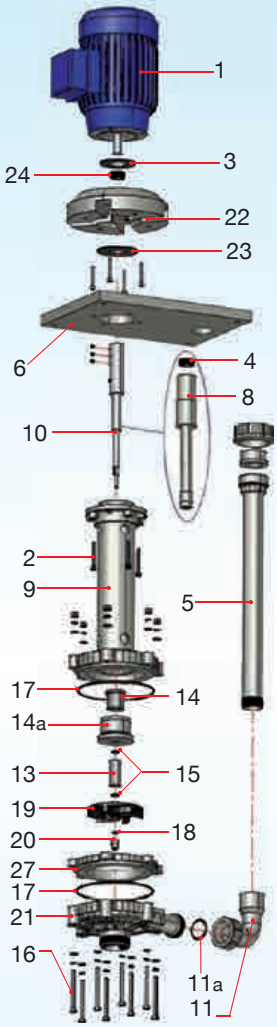

Descrizione particolari			
1	Motore	14a	Sede bussola stat.
2	Viti	15	O-Ring bussola
3	Deflettore	16	Viti corp. pompa
4	Anello tenuta	17	O-Ring corpo p.
5	Mandata	18	O-Ring ogiva
6	Piastra	19	Girante
8	Rivest. albero	20	Ogiva
9	Colonna	21	Corpo pompa
10	Albero	22	Lanterna
11	Gomito	23	Deflettore
11a	O-Ring gomito	24	Anello tenuta
13	Bussola rotante	27	Flangia distanziale
14	Bussola statica		

Part. description			
1	*Motor*	*14a*	*Static bushing hous.*
2	*Screw*	*15*	*Bush O-Ring*
3	*Baffe*	*16*	*Pump housing bolts*
4	*Seal ring*	*17*	*Pump housing O-Ring*
5	*Discharge pipe*	*18*	*Ogive O-Ring*
6	*Support flange*	*19*	*Impeller*
8	*Shaft sleeve*	*20*	*Ogive*
9	*Pump column*	*21*	*Pump housing*
10	*Shaft*	*22*	*Vapour seal housing*
11	*Elbow*	*23*	*Baffe*
11a	*Elbow O-Ring*	*24*	*Seal ring*
13	*Rotating bush*	*27*	*Flange spacer*
14	*Stating bushing*		

DATI TECNICI
SPECIFICATION

	Portata max l/m	Prevalenza max m	Motore KW	IN/OUT D mm	T max esercizio °C	Peso Kg
	Maximum capacity l/m	*Total head*	*Motor KW*	*IN/OUT D mm*	*T max exercise °C*	*Weight Kg* *
50 Hz	408	20	1,5	63 x 50	PP = 70°C PVDF = 95°C	PP = 26 ÷ 36 * PVDF = 34 ÷ 44
60 Hz	420	21	1,5			

* Può variare in conformità al motore utilizzato ed alla profondità della pompa.

* *It changes according with motor supplier and pump depth.*

POMPE VERTICALI
VERTICAL PUMPS

EVV 25

DIMENSIONI
DIMENSION

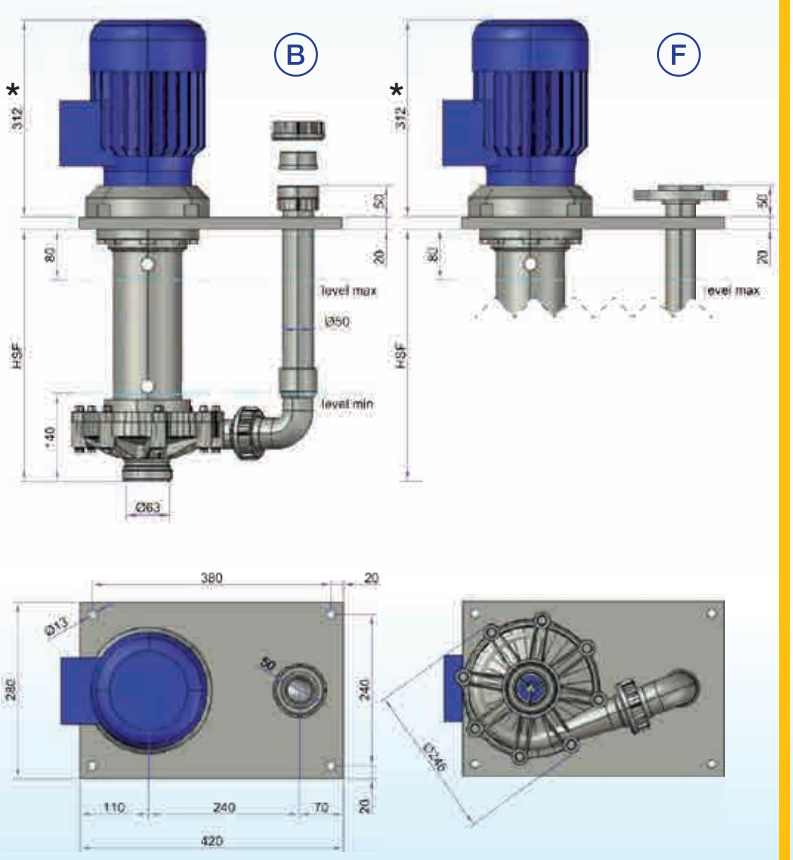

* Può variare in conformità al motore utilizzato

* *It changes according with motor supplier*

CURVE
PERFORMANCE

50 Hz - Rpm 2800

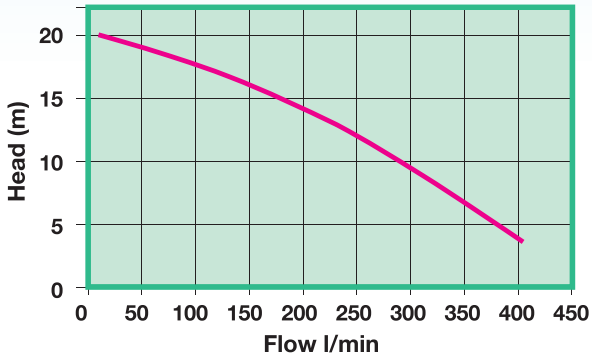

60 Hz - Rpm 3450

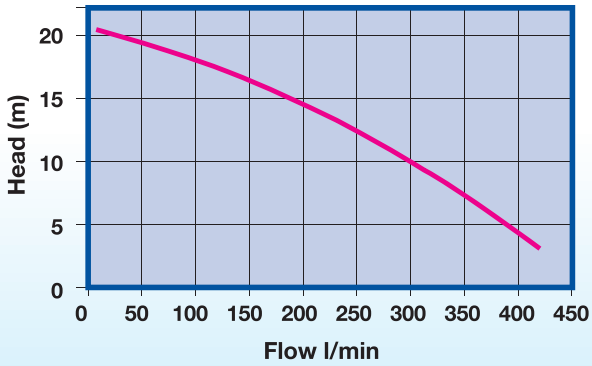

Riferimenti curve: acqua a temperatura ambiente
Curve references: water at room temperature

IDENTIFICAZIONE POMPA / *PUMP IDENTIFICATION*

Modello *Model*	Corpo pompa *Pump body*	Albero *Shaft*	Coppia di bussole statica/rotante *Bushing couple static/rotating*	HSF mm *DEPTH mm*	Attacchi *Connections*	Motore *Motor*	Optional *Option*
EVV25	P=PP F=PVDF	X= INOX AISI 316 T= TITANIO *TITANIUM* H= HASTELLOY	1 = PTFE/PTFE 2 = PTFE/GRAFITE *PTFE/CARBON* 3 = PTFE/SIC 4 = GRAFITE/SIC *CARBON/SIC* 5 = GRAFITE/GRAFITE *CARBON/CARBON* 9 = SIC/SIC *SIC/SIC*	04 = 400 05 = 500 06 = 600 07 = 700 08 = 800 09 = 900 10 = 1.000 11 = 1.100 12 = 1.200 13 = 1.300 14 = 1.400 15 = 1.500 16 = 1.600 17 = 1.700 18 = 1.800 19 = 1.900 20 = 2.000	B= Bocchettoni *Socket union* F= Flangiati *Flanged* P= Portagomma *Hosebarb*	A= 50HZ Rpm 2800 B= 60 HZ Rpm 3450	S= Succhieruola *Strainer* L= Lanterna *Fume seal* B= Bussola intermedia *Additional bushing couple*
EVV25	**P**	**X**	**3**	**06**	**B**	**A**	**L**

POMPE VERTICALI

VERTICAL PUMPS

evv 30

ESPLOSO
EXPLODED VIEW

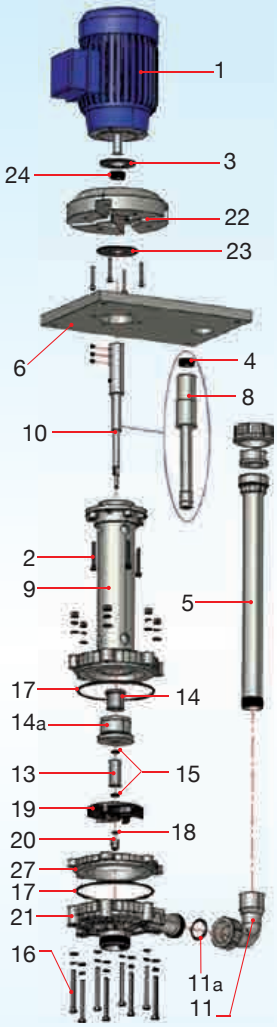

Descrizione particolari			
1	Motore	14a	Sede bussola stat.
2	Viti	15	O-Ring bussola
3	Deflettore	16	Viti corp. pompa
4	Anello tenuta	17	O-Ring corpo p.
5	Mandata	18	O-Ring ogiva
6	Piastra	19	Girante
8	Rivest. albero	20	Ogiva
9	Colonna	21	Corpo pompa
10	Albero	22	Lanterna
11	Gomito	23	Deflettore
11a	O-Ring gomito	24	Anello tenuta
13	Bussola rotante	27	Flangia distanziale
14	Bussola statica		

Part. description			
1	*Motor*	*14a*	*Static bushing hous.*
2	*Screw*	*15*	*Bush O-Ring*
3	*Baffe*	*16*	*Pump housing bolts*
4	*Seal ring*	*17*	*Pump housing O-Ring*
5	*Discharge pipe*	*18*	*Ogive O-Ring*
6	*Support flange*	*19*	*Impeller*
8	*Shaft sleeve*	*20*	*Ogive*
9	*Pump column*	*21*	*Pump housing*
10	*Shaft*	*22*	*Vapour seal housing*
11	*Elbow*	*23*	*Baffe*
11a	*Elbow O-Ring*	*24*	*Seal ring*
13	*Rotating bush*	*27*	*Flange spacer*
14	*Stating bushing*		

DATI TECNICI
SPECIFICATION

	Portata max l/m	Prevalenza max m	Motore KW	IN/OUT D mm	T max esercizio °C	Peso Kg
	Maximum capacity l/m	*Total head*	*Motor KW*	*IN/OUT D mm*	*T max exercise °C*	*Weight Kg* *
50 Hz	486	23	2,2	63 x 50	PP = 70°C PVDF = 95°C	PP = 28 ÷ 38 * PVDF = 36 ÷ 46
60 Hz	500	24	2,2			

* Può variare in conformità al motore utilizzato ed alla profondità della pompa.

* *It changes according with motor supplier and pump depth.*

POMPE VERTICALI
VERTICAL PUMPS

EVV 30

DIMENSIONI
DIMENSION

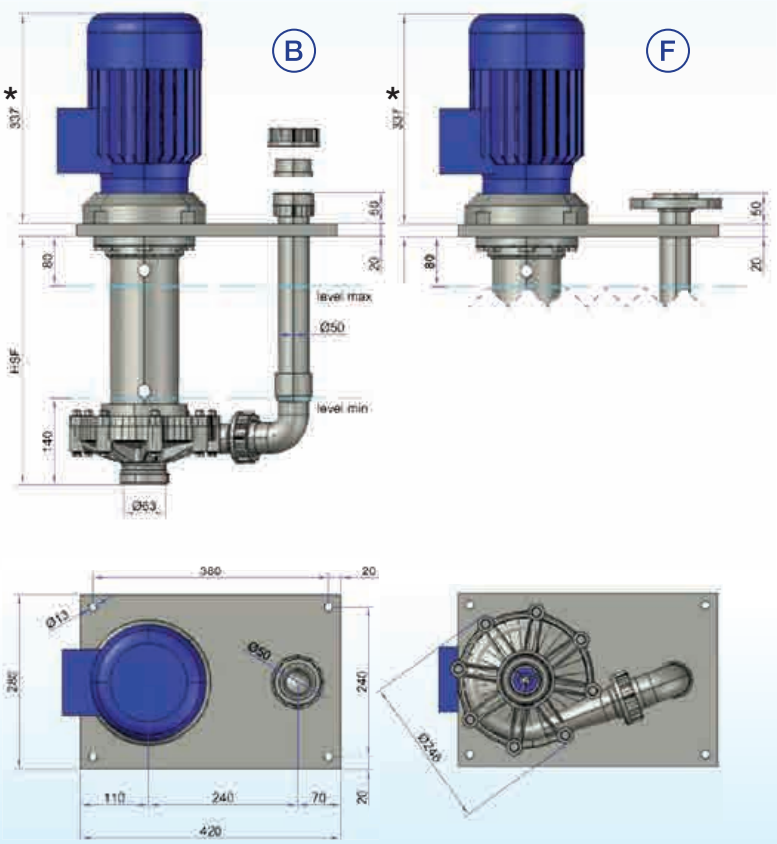

* Può variare in conformità al motore utilizzato

* *It changes according with motor supplier*

CURVE
PERFORMANCE

50 Hz - Rpm 2800

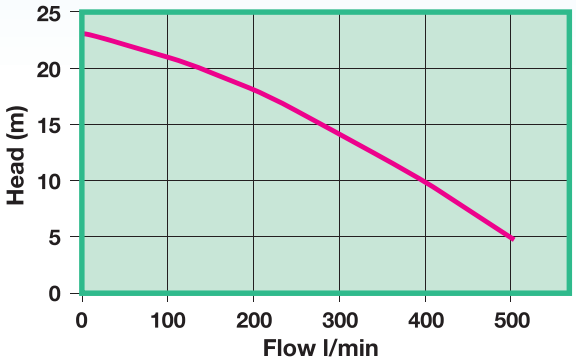

60 Hz - Rpm 3450

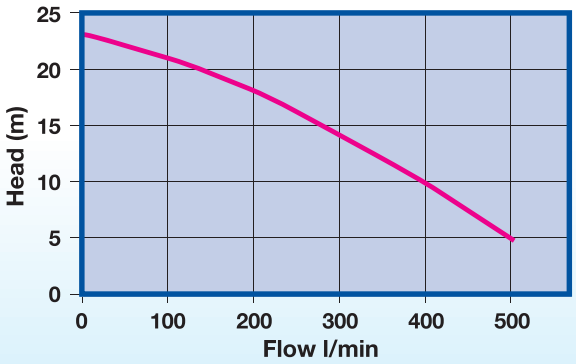

Riferimenti curve: acqua a temperatura ambiente
Curve references: water at room temperature

IDENTIFICAZIONE POMPA / *PUMP IDENTIFICATION*

Modello *Model*	Corpo pompa *Pump body*	Albero *Shaft*	Coppia di bussole statica/rotante *Bushing couple static/rotating*	HSF mm *DEPTH mm*	Attacchi *Connections*	Motore *Motor*	Optional *Option*
EVV30	P=PP F=PVDF	X= INOX AISI 316 T= TITANIO *TITANIUM* H= HASTELLOY	1 = PTFE/PTFE 2 = PTFE/GRAFITE *PTFE/CARBON* 3 = PTFE/SIC 4 = GRAFITE/SIC *CARBON/SIC* 5 = GRAFITE/GRAFITE *CARBON/CARBON* 9 = SIC/SIC *SIC/SIC*	04 = 400 05 = 500 06 = 600 07 = 700 08 = 800 09 = 900 10 = 1.000 11 = 1.100 12 = 1.200 13 = 1.300 14 = 1.400 15 = 1.500 16 = 1.600 17 = 1.700 18 = 1.800 19 = 1.900 20 = 2.000	B= Bocchettoni *Socket union* F= Flangiati *Flanged* P= Portagomma *Hosebarb*	A= 50HZ Rpm 2800 B= 60 HZ Rpm 3450	S= Succhieruola *Strainer* L= Lanterna *Fume seal* B= Bussola intermedia *Additional bushing couple*
EVV30	**P**	**X**	**3**	**06**	**B**	**A**	**L**

POMPE VERTICALI

VERTICAL PUMPS

evv 35

ESPLOSO
EXPLODED VIEW

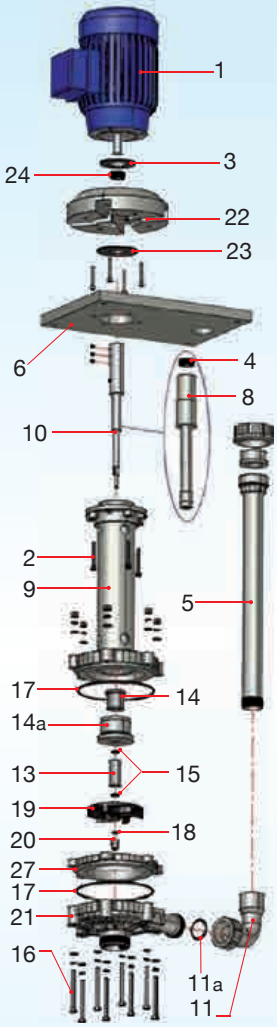

Descrizione particolari			
1	Motore	14a	Sede bussola stat.
2	Viti	15	O-Ring bussola
3	Deflettore	16	Viti corp. pompa
4	Anello tenuta	17	O-Ring corpo p.
5	Mandata	18	O-Ring ogiva
6	Piastra	19	Girante
8	Rivest. albero	20	Ogiva
9	Colonna	21	Corpo pompa
10	Albero	22	Lanterna
11	Gomito	23	Deflettore
11a	O-Ring gomito	24	Anello tenuta
13	Bussola rotante	27	Flangia distanziale
14	Bussola statica		

Part. description			
1	*Motor*	*14a*	*Static bushing hous.*
2	*Screw*	*15*	*Bush O-Ring*
3	*Baffe*	*16*	*Pump housing bolts*
4	*Seal ring*	*17*	*Pump housing O-Ring*
5	*Discharge pipe*	*18*	*Ogive O-Ring*
6	*Support flange*	*19*	*Impeller*
8	*Shaft sleeve*	*20*	*Ogive*
9	*Pump column*	*21*	*Pump housing*
10	*Shaft*	*22*	*Vapour seal housing*
11	*Elbow*	*23*	*Baffe*
11a	*Elbow O-Ring*	*24*	*Seal ring*
13	*Rotating bush*	*27*	*Flange spacer*
14	*Stating bushing*		

DATI TECNICI
SPECIFICATION

	Portata max l/m	Prevalenza max m	Motore KW	IN/OUT D mm	T max esercizio °C	Peso Kg
	Maximum capacity l/m	*Total head*	*Motor KW*	*IN/OUT D mm*	*T max exercise °C*	*Weight Kg* *
50 Hz	555	27	3	63 x 50	PP = 70°C PVDF = 95°C	PP = 33 ÷ 43 * PVDF = 41 ÷ 51
60 Hz	560	28	3			

* Può variare in conformità al motore utilizzato ed alla profondità della pompa.

* *It changes according with motor supplier and pump depth.*

POMPE VERTICALI
VERTICAL PUMPS

EVV 35

DIMENSIONI
DIMENSION

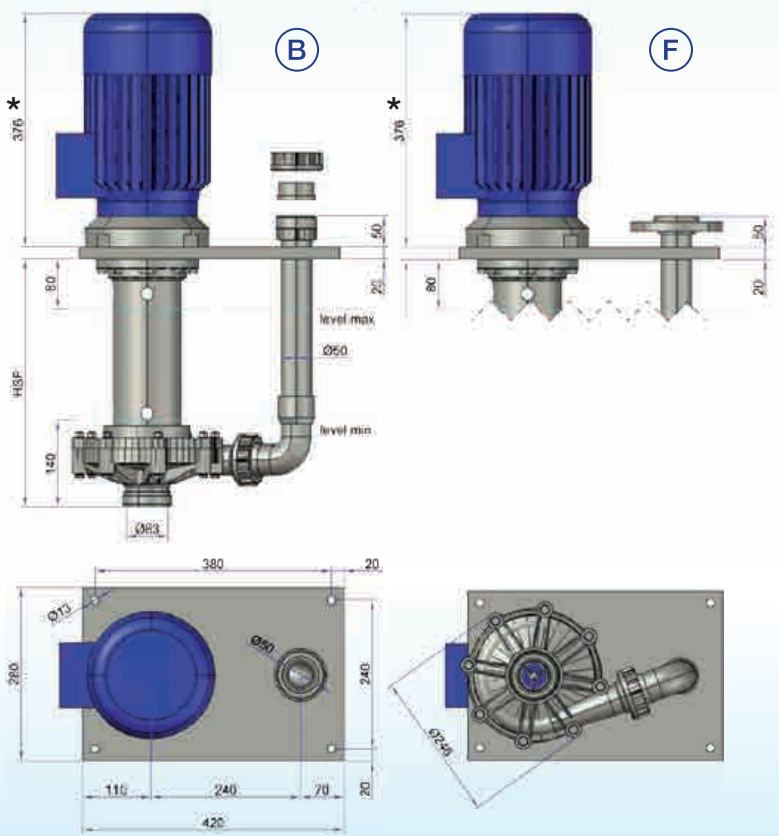

* Può variare in conformità al motore utilizzato

* *It changes according with motor supplier*

CURVE
PERFORMANCE

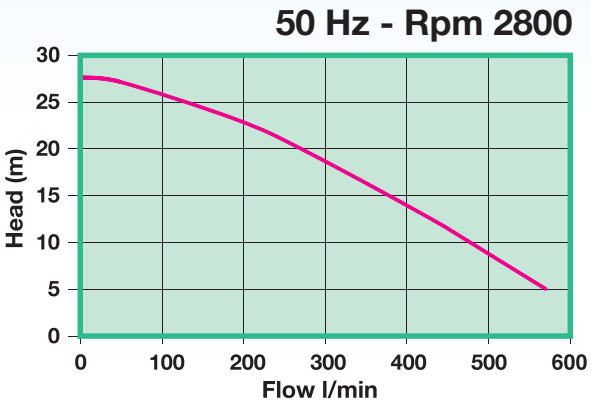

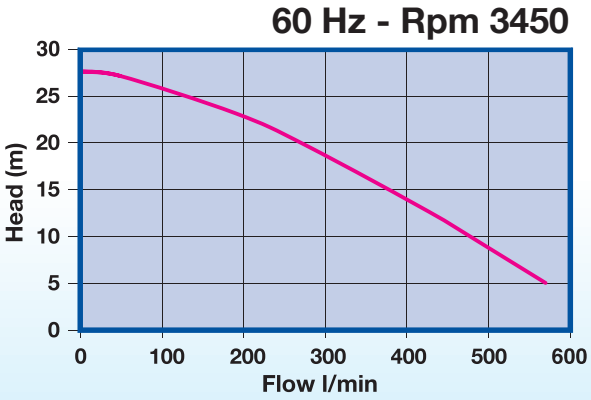

Riferimenti curve: acqua a temperatura ambiente
Curve references: water at room temperature

IDENTIFICAZIONE POMPA / *PUMP IDENTIFICATION*

Modello *Model*	Corpo pompa *Pump body*	Albero *Shaft*	Coppia di bussole statica/rotante *Bushing couple static/rotating*	HSF mm *DEPTH mm*	Attacchi *Connections*	Motore *Motor*	Optional *Option*
EVV35	P=PP F=PVDF	X= INOX AISI 316 T= TITANIO *TITANIUM* H= HASTELLOY	1 = PTFE/PTFE 2 = PTFE/GRAFITE *PTFE/CARBON* 3 = PTFE/SIC 4 = GRAFITE/SIC *CARBON/SIC* 5 = GRAFITE/GRAFITE *CARBON/CARBON* 9 = SIC/SIC *SIC/SIC*	04 = 400 05 = 500 06 = 600 07 = 700 08 = 800 09 = 900 10 = 1.000 11 = 1.100 12 = 1.200 13 = 1.300 14 = 1.400 15 = 1.500 16 = 1.600 17 = 1.700 18 = 1.800 19 = 1.900 20 = 2.000	B= Bocchettoni *Socket union* F= Flangiati *Flanged* P= Portagomma *Hosebarb*	A= 50HZ Rpm 2800 B= 60 HZ Rpm 3450	S= Succhieruola *Strainer* L= Lanterna *Fume seal* B= Bussola intermedia *Additional bushing couple*
EVV35	**P**	**X**	**3**	**06**	**B**	**A**	**L**

POMPE VERTICALI

VERTICAL PUMPS

evv 40

ESPLOSO
EXPLODED VIEW

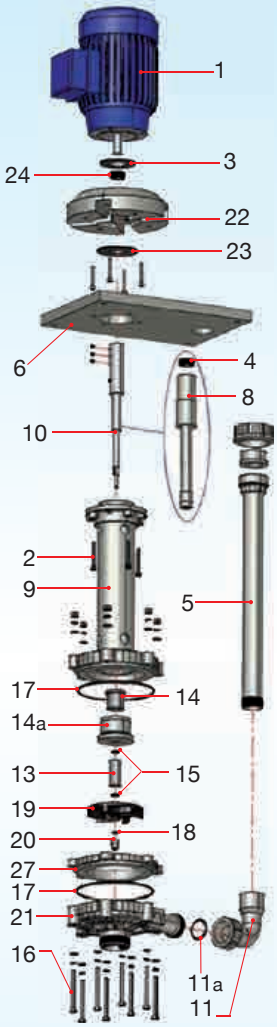

Descrizione particolari			
1	Motore	14a	Sede bussola stat.
2	Viti	15	O-Ring bussola
3	Deflettore	16	Viti corp. pompa
4	Anello tenuta	17	O-Ring corpo p.
5	Mandata	18	O-Ring ogiva
6	Piastra	19	Girante
8	Rivest. albero	20	Ogiva
9	Colonna	21	Corpo pompa
10	Albero	22	Lanterna
11	Gomito	23	Deflettore
11a	O-Ring gomito	24	Anello tenuta
13	Bussola rotante	25	Ghiera bussola
14	Bussola statica	26	O-Ring ghiera

Part. description			
1	*Motor*	*14a*	*Static bushing hous.*
2	*Screw*	*15*	*Bush O-Ring*
3	*Baffe*	*16*	*Pump housing bolts*
4	*Seal ring*	*17*	*Pump housing O-Ring*
5	*Discharge pipe*	*18*	*Ogive O-Ring*
6	*Support flange*	*19*	*Impeller*
8	*Shaft sleeve*	*20*	*Ogive*
9	*Pump column*	*21*	*Pump housing*
10	*Shaft*	*22*	*Vapour seal housing*
11	*Elbow*	*23*	*Baffe*
11a	*Elbow O-Ring*	*24*	*Seal ring*
13	*Rotating bush*	*25*	*Nut bushing*
14	*Stating bushing*	*26*	*Nut O-ring*

DATI TECNICI
SPECIFICATION

	Portata max l/m	Prevalenza max m	Motore KW	IN/OUT D mm	T max esercizio °C	Peso Kg
	Maximum capacity l/m	*Total head*	*Motor KW*	*IN/OUT D mm*	*T max exercise °C*	*Weight Kg* *
50 Hz	665	31	4	63 x 50	PP = 70°C PVDF = 95°C	PP = 33 ÷ 43 * PVDF = 33 ÷ 43
60 Hz	665	31	4			

* Può variare in conformità al motore utilizzato ed alla profondità della pompa.

* *It changes according with motor supplier and pump depth.*

POMPE VERTICALI
VERTICAL PUMPS

EVV 40

DIMENSIONI
DIMENSION

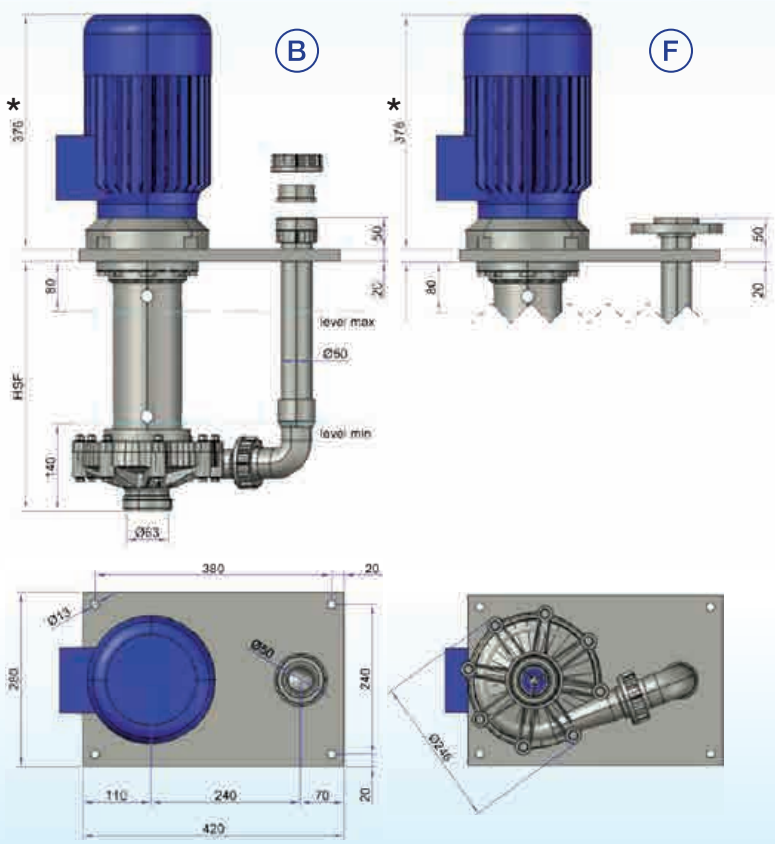

* Può variare in conformità al motore utilizzato

* *It changes according with motor supplier*

CURVE
PERFORMANCE

50 Hz

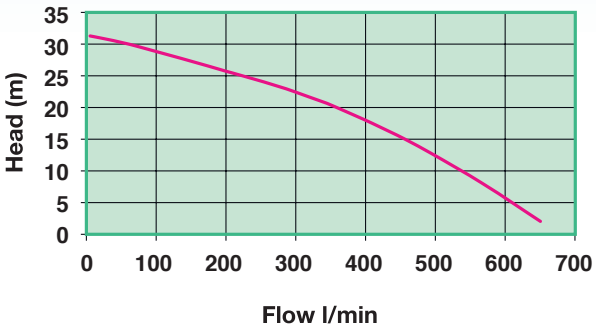

60 Hz

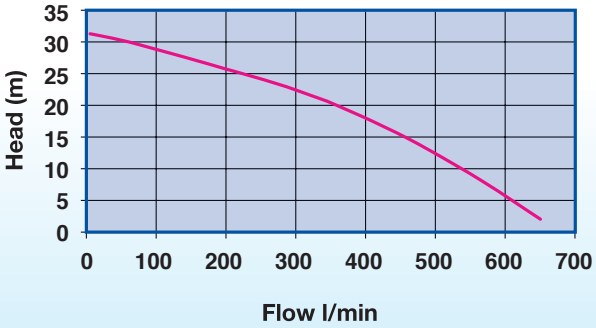

Riferimenti curve: acqua a temperatura ambiente
Curve references: water at room temperature

IDENTIFICAZIONE POMPA / *PUMP IDENTIFICATION*

Modello *Model*	Corpo pompa *Pump body*	Albero *Shaft*	Coppia di bussole statica/rotante *Bushing couple static/rotating*	HSF mm *DEPTH mm*	Attacchi *Connections*	Motore *Motor*	Optional *Option*
EVV40	P=PP F=PVDF	X= INOX AISI 316 T= TITANIO *TITANIUM* H= HASTELLOY	1 = PTFE/PTFE 2 = PTFE/GRAFITE *PTFE/CARBON* 3 = PTFE/SIC 4 = GRAFITE/SIC *CARBON/SIC* 5 = GRAFITE/GRAFITE *CARBON/CARBON* 9 = SIC/SIC *SIC/SIC*	04 = 400 05 = 500 06 = 600 07 = 700 08 = 800 09 = 900 10 = 1.000 11 = 1.100 12 = 1.200 13 = 1.300 14 = 1.400 15 = 1.500 16 = 1.600 17 = 1.700 18 = 1.800 19 = 1.900 20 = 2.000	B= Bocchettoni *Socket union* F= Flangiati *Flanged* P= Portagomma *Hosebarb*	A= 50HZ B= 60 HZ	S= Succhieruola *Strainer* L= Lanterna *Fume seal* B= Bussola intermedia *Additional bushing couple*
EVV40	**P**	**X**	**3**	**06**	**B**	**A**	**L**

POMPE VERTICALI

VERTICAL PUMPS

evv 45

ESPLOSO
EXPLODED VIEW

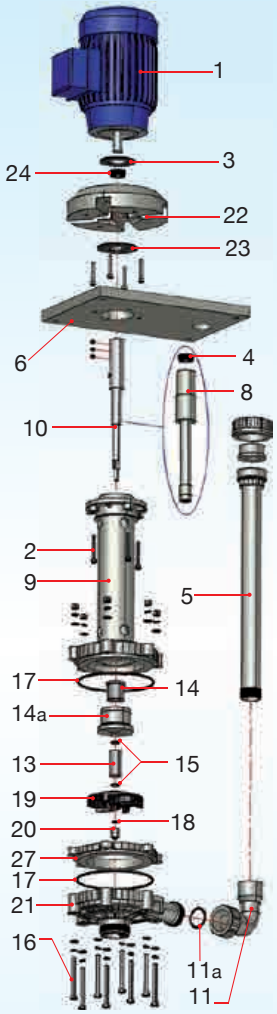

Descrizione particolari			
1	Motore	14a	Sede bussola stat.
2	Viti	15	O-Ring bussola
3	Deflettore	16	Viti corp. pompa
4	Anello tenuta	17	O-Ring corpo p.
5	Mandata	18	O-Ring ogiva
6	Piastra	19	Girante
8	Rivest. albero	20	Ogiva
9	Colonna	21	Corpo pompa
10	Albero	22	Lanterna
11	Gomito	23	Deflettore
11a	O-Ring gomito	24	Anello tenuta
13	Bussola rotante	25	Ghiera bussola
14	Bussola statica	26	O-Ring ghiera

Part. description			
1	*Motor*	*14a*	*Static bushing hous.*
2	*Screw*	*15*	*Bush O-Ring*
3	*Baffe*	*16*	*Pump housing bolts*
4	*Seal ring*	*17*	*Pump housing O-Ring*
5	*Discharge pipe*	*18*	*Ogive O-Ring*
6	*Support flange*	*19*	*Impeller*
8	*Shaft sleeve*	*20*	*Ogive*
9	*Pump column*	*21*	*Pump housing*
10	*Shaft*	*22*	*Vapour seal housing*
11	*Elbow*	*23*	*Baffe*
11a	*Elbow O-Ring*	*24*	*Seal ring*
13	*Rotating bush*	*25*	*Nut bushing*
14	*Stating bushing*	*26*	*Nut O-ring*

DATI TECNICI
SPECIFICATION

	Portata max l/m	Prevalenza max m	Motore KW	IN/OUT D mm	T max esercizio °C	Peso Kg
	Maximum capacity l/m	*Total head*	*Motor KW*	*IN/OUT D mm*	*T max exercise °C*	*Weight * Kg*
50 Hz	694	34	5,5	63 x 50	PP = 70°C PVDF = 95°C	PP = 43 ÷ 53 * PVDF = 51 ÷ 61
60 Hz	730	35	5,5			

* Può variare in conformità al motore utilizzato ed alla profondità della pompa.

* *It changes according with motor supplier and pump depth.*

POMPE VERTICALI
VERTICAL PUMPS

EVV 45

DIMENSIONI
DIMENSION

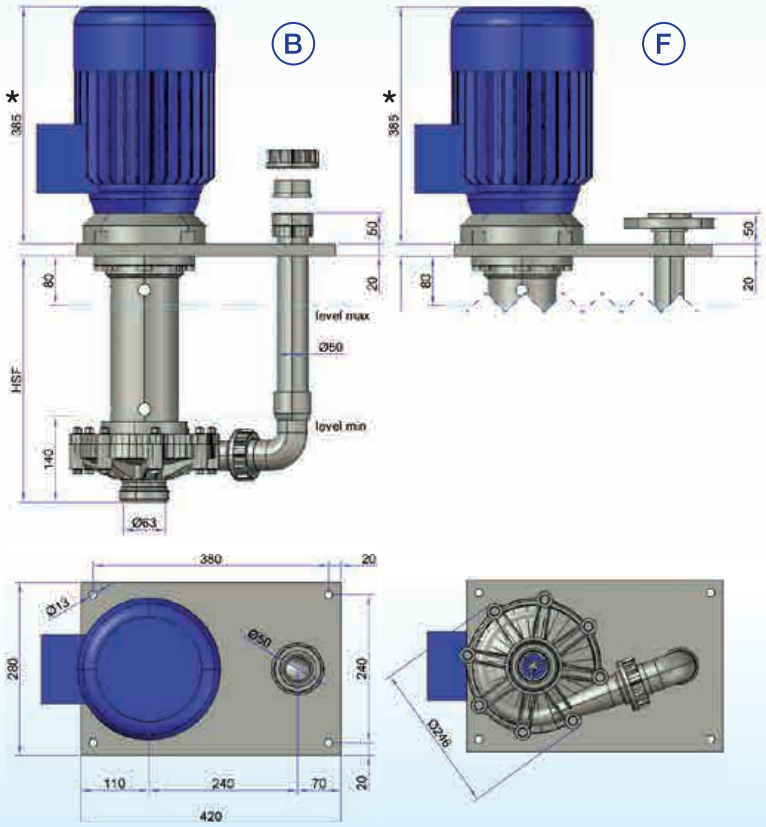

* Può variare in conformità al motore utilizzato

* *It changes according with motor supplier*

CURVE
PERFORMANCE

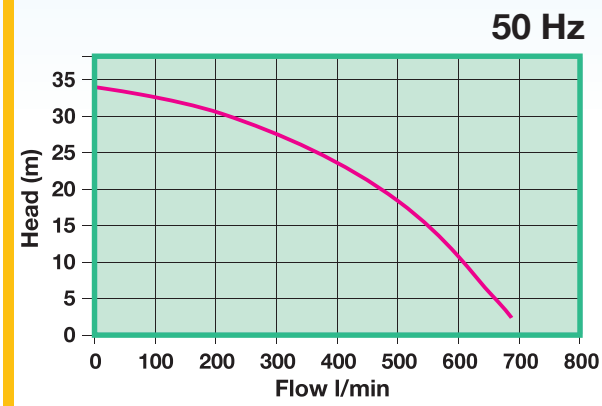

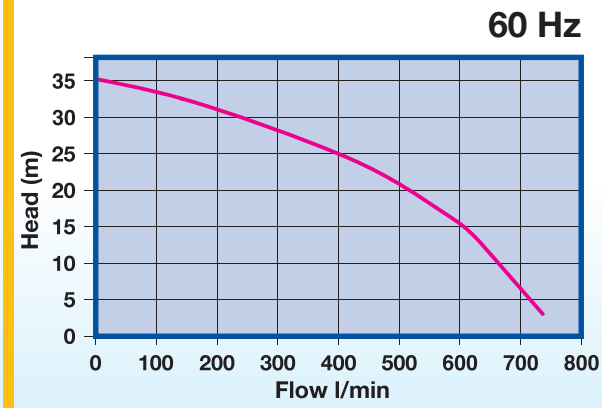

Riferimenti curve: acqua a temperatura ambiente
Curve references: water at room temperature

IDENTIFICAZIONE POMPA / *PUMP IDENTIFICATION*

Modello *Model*	Corpo pompa *Pump body*	Albero *Shaft*	Coppia di bussole statica/rotante *Bushing couple static/rotating*	HSF mm *DEPTH mm*	Attacchi *Connections*	Motore *Motor*	Optional *Option*
EVV45	P=PP F=PVDF	X= INOX AISI 316 T= TITANIO *TITANIUM* H= HASTELLOY	1 = PTFE/PTFE 2 = PTFE/GRAFITE *PTFE/CARBON* 3 = PTFE/SIC 4 = GRAFITE/SIC *CARBON/SIC* 5 = GRAFITE/GRAFITE *CARBON/CARBON* 9 = SIC/SIC *SIC/SIC*	04 = 400 05 = 500 06 = 600 07 = 700 08 = 800 09 = 900 10 = 1.000 11 = 1.100 12 = 1.200 13 = 1.300 14 = 1.400 15 = 1.500 16 = 1.600 17 = 1.700 18 = 1.800 19 = 1.900 20 = 2.000	B= Bocchettoni *Socket union* F= Flangiati *Flanged* P= Portagomma *Hosebarb*	A= 50HZ B= 60 HZ	S= Succhieruola *Strainer* L= Lanterna *Fume seal* B= Bussola intermedia *Additional bushing couple*
EVV45	**P**	**X**	**3**	**E**	**B**	**A**	**L**

POMPE VERTICALI

VERTICAL PUMPS

V 3

ESPLOSO
EXPLODED VIEW

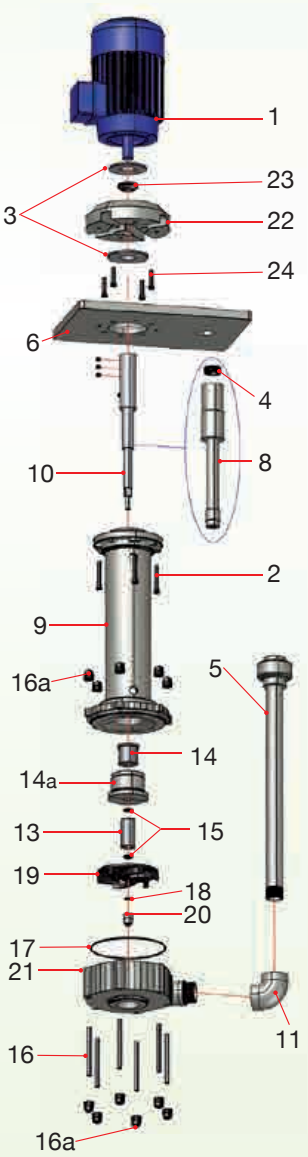

Descrizione particolari

1	Motore	14a	Sede bussola statica
2	Viti colonna	15	O-ring bussola
3	Deflettore	16	Viti corpo pompa
4	Anello tenuta	16a	Dado corpo pompa
5	Mandata	17	O-ring corpo pompa
6	Piastra	18	O-ring ogiva
8	Rivest. albero	19	Girante
9	Colonna	20	Ogiva
10	Albero	21	Corpo pompa
11	Gomito	22	Lanterna vapori
13	Bussola rotante	24	Anello tenuta
14	Bussola statica	24a	Dadi lanterna

Part. description

1	*Motor*	*14a*	*Static bush housing*
2	*Columns screw*	*15*	*Bush O-ring*
3	*Baffe*	*16*	*Pump housing screw*
4	*Seal ring*	*16a*	*Pump housing nut*
5	*Discharge pipe*	*17*	*Pump housing O-ring*
6	*Support flange*	*18*	*Ogive O-ring*
8	*Shaft sleeve*	*19*	*Impeller*
9	*Pump column*	*20*	*Ogive*
10	*Shaft*	*21*	*Pump housing*
11	*Elbow*	*22*	*Vapour seal housing*
13	*Rotating bush*	*24*	*Seal Ring*
14	*Static bushing*	*24a*	*Vapour seal nut*

DATI TECNICI
SPECIFICATION

	Portata max l/m	Prevalenza max m	Motore KW	T max esercizio °C
	Maximum capacity l/m	*Total head*	*Motor KW*	*T max exercise °C*
50 Hz	350 ÷ 780	18 ÷ 27	1,5 ÷ 5,5	55 PVC 90 PVDF * 70 PP
60 Hz	350 ÷ 780	18 ÷ 27	1,5 ÷ 5,5	

* Può variare in conformità al motore utilizzato ed alla profondità della pompa.

* *It changes according with motor supplier and pump depth.*

POMPE VERTICALI

VERTICAL PUMPS

V 3

DIMENSIONI
DIMENSION

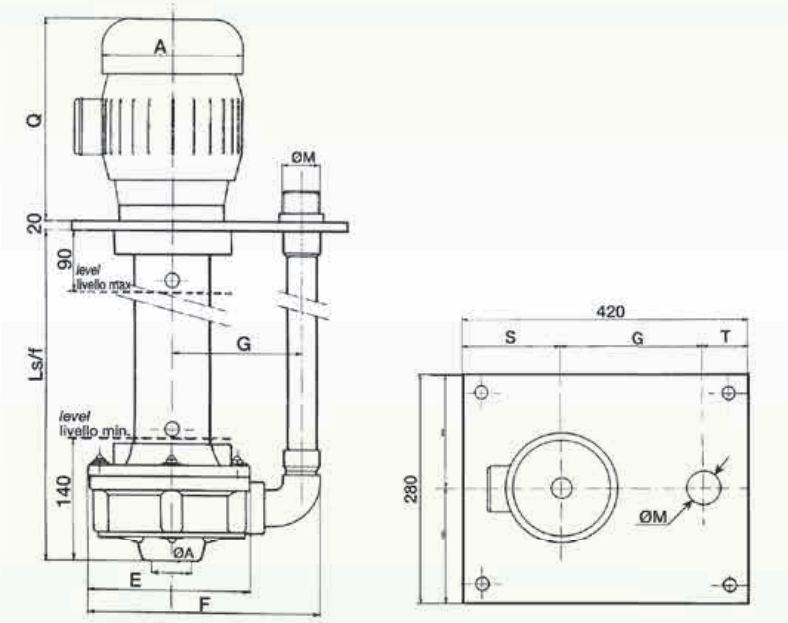

* Può variare in conformità al motore utilizzato

* *It changes according with motor supplier*

CURVE
PERFORMANCE

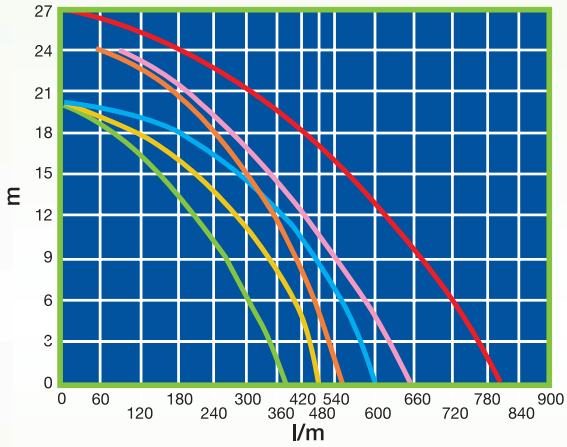

V3A1 — V3B1
V3A2 — V3B2
V3A3 — V3B3

Riferimenti curve: acqua a temperatura ambiente
Curve references: water at room temperature

Modello *Model*	DIMENSIONI D'INGOMBRO (mm) *DIMENSION (mm)*										Motore *Motor*		
	ØA	ØM	A	Q	E	F	G	S	T	Lungh: s/f *Lenght*	Kw	HP	RPM
V3A1	2"	1 ¼"	180	312	220	325	190	150	80	≤400 400 ÷ 600 600 ÷ 1000 1000 ÷ 1500 1500 ÷ 2000	1.5	2	2800
V3A2	2"	1 ¼"	180	337	220	325	190	150	80		2.2	3	2800
V3A3	2"	1 ½"	225	385	220	332	190	150	80		4	5.5	2800
V3B1	2"	1 ½"	200	376	220	332	190	150	80		3	4	2800
V3B2	2"	1 ½"	225	385	220	332	190	150	80		4	5.5	2800
V3B3	2"	1 ½"	225	385	220	332	190	150	80		5.5	7.5	2800

IDENTIFICAZIONE POMPA
PUMP IDENTIFICATION

Modello *Model*	Corpo pompa *Pump body*	Albero *Shaft*	Coppia di bussole statica/rotante *Bushing couple static/rotating*	HSF mm *DEPTH mm*	Optional *Option*
V3A1 **V3A2** **V3A3** **V3B1** **V3B2** **V3B3**	M=PP C=PVC V=PVDF	X= INOX AISI 316 T= TITANIO *TITANIUM* H= HASTELLOY	1 = PTFE/PTFE 2 = PTFE/GRAFITE *PTFE/CARBON* 3 = GRAFITE/CERAMICA *CARBON/CERAMIC* 4 = PTFE/CERAMICA *PTFE/CERAMIC* 5 = GRAFITE/GRAFITE *CARBON/CARBON* 6 = GRAFITE/PTFE *GRAFITE/PTFE*	04 = 400 06 = 600 08 = 800 10 = 1.000 12 = 1.200 14 = 1.400 16 = 1.600 18 = 1.800 20 = 2.000	S= Succhieruola *Strainer* L= Lanterna *Fume seal* B= Bussola intermedia *Additional bushing couple*
V3A1	**C**	**T**	**1**	**06**	**L**

POMPE VERTICALI

VERTICAL PUMPS

V 4

ESPLOSO
EXPLODED VIEW

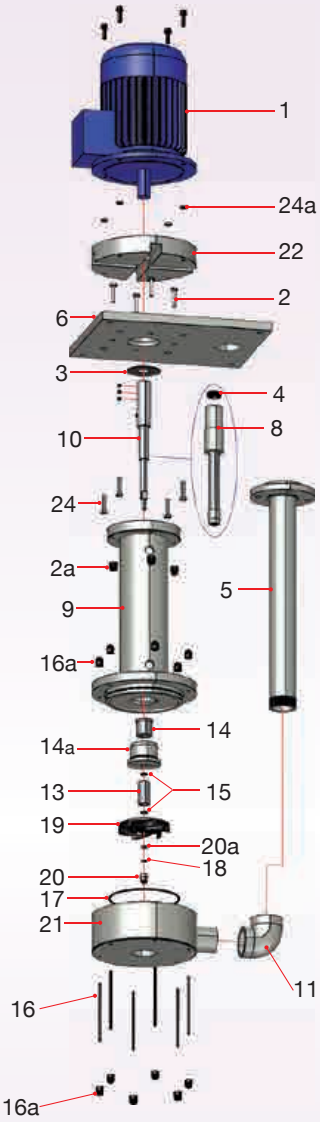

Descrizione particolari			
1	Motore	14a	Sede bussola statica
2	Viti colonna	15	O-ring bussola
2a	Dadi colonna	16	Viti corpo pompa
3	Deflettore	16a	Dado corpo pompa
4	Anello tenuta	17	O-ring corpo pompa
5	Mandata	18	O-ring ogiva
6	Piastra	19	Girante
8	Rivest. albero	20	Ogiva
9	Colonna	20a	Dado ogiva
10	Albero	21	Corpo pompa
11	Gomito	22	Lanterna
13	Bussola rotante	24	Anello tenuta
14	Bussola statica	24a	Dadi lanterna

Part. description			
1	*Motor*	*14a*	*Static bush housing*
2	*Column screws*	*15*	*Bush O-ring*
2a	*Column nut*	*16*	*Pump housing screw*
3	*Baffe*	*16a*	*Pump housing nut*
4	*Seal ring*	*17*	*Pump housing O-ring*
5	*Discharge pipe*	*18*	*Ogive O-ring*
6	*Support flange*	*19*	*Impeller*
8	*Shaft sleeve*	*20*	*Ogive*
9	*Pump column*	*20a*	*Ogive nut*
10	*Shaft*	*21*	*Pump housing*
11	*Elbow*	*22*	*Vapour seal housing*
13	*Rotating bush*	*24*	*Seal Ring*
14	*Static bushing*	*24a*	*Vapour seal nut*

DATI TECNICI
SPECIFICATION

	Portata max l/m	Prevalenza max m	Motore KW	T max esercizio °C
	Maximum capacity l/m	*Total head*	*Motor KW*	*T max exercise °C*
50 Hz	800 ÷ 1350	28 ÷ 32	5,5 ÷ 11	55 PVC 90 PVDF * 70 PP
60 Hz	800 ÷ 1350	28 ÷ 32	5,5 ÷ 11	

* Può variare in conformità al motore utilizzato ed alla profondità della pompa.

* *It changes according with motor supplier and pump depth.*

POMPE VERTICALI

VERTICAL PUMPS

V 4

DIMENSIONI
DIMENSION

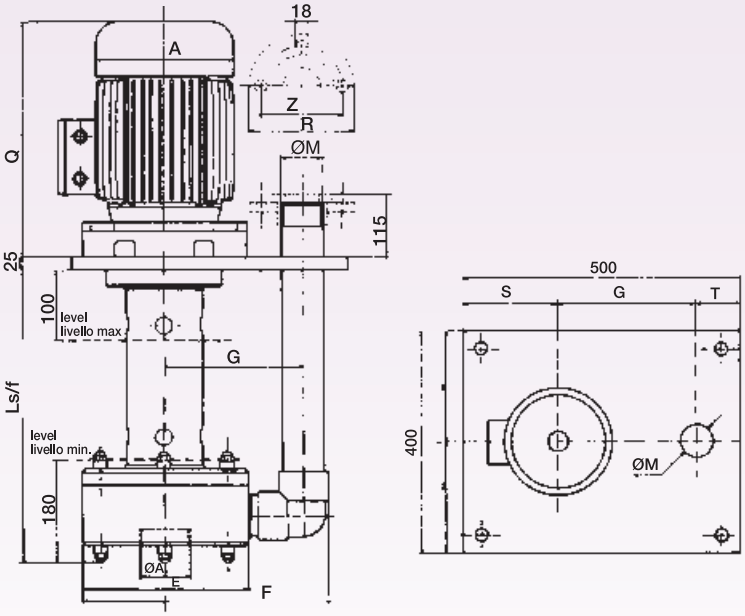

* Può variare in conformità al motore utilizzato

* *It changes according with motor supplier*

CURVE
PERFORMANCE

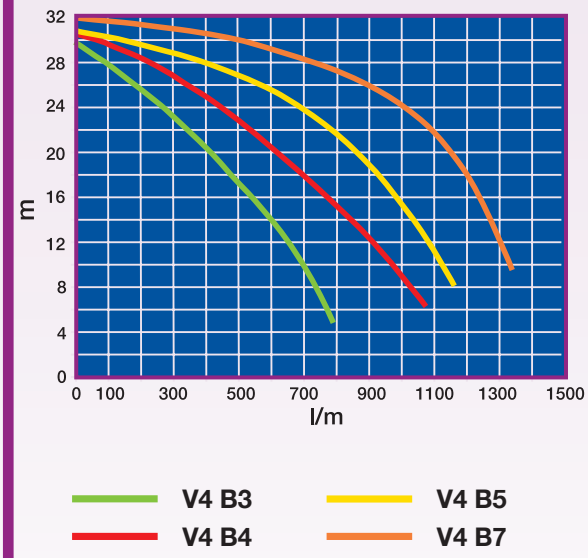

Riferimenti curve: acqua a temperatura ambiente
Curve references: water at room temperature

Modello *Model*	DIMENSIONI D'INGOMBRO (mm) *DIMENSION (mm)*												Motore *Motor*		
	ØA	ØM	A	Q	E	F	G	S	T	Z	R	Lungh: s/f *Lenght*	kW	HP	RPM
V4 B3	2 ½"	2"	132	416	300	440	250	170	80	125	165	≤400 400 ÷ 600 600 ÷ 1000 1000 ÷ 1500 1500 ÷ 2000	5.5	7.5	2800
V4 B4	3"	2 ½"	132	416	300	446	250	170	80	145	185		7.5	10	2800
V4 B5	3"	2 ½"	132	436	300	455	250	170	80	145	185		9.2	12.5	2800
V4 B7	3 ½"	3"	132	436	300	455	250	170	80	160	200		11	15	2800

IDENTIFICAZIONE POMPA / *PUMP IDENTIFICATION*

Modello *Model*	Corpo pompa *Pump body*	Albero *Shaft*	Coppia di bussole statica/rotante *Bushing couple static/rotating*	HSF mm *DEPTH mm*	Optional *Option*
V4B3 **V4B4** **V4B5** **V4B7**	M=PP C=PVC V=PVDF	X= INOX AISI 316 T= TITANIO *TITANIUM* H= HASTELLOY	1 = PTFE/PTFE 2 = PTFE/GRAFITE *PTFE/CARBON* 3 = GRAFITE/CERAMICA *CARBON/CERAMIC* 4 = PTFE/CERAMICA *PTFE/CERAMIC* 5 = GRAFITE/GRAFITE *CARBON/CARBON* 6 = GRAFITE/PTFE *GRAFITE/PTFE*	04 = 400 06 = 600 08 = 800 10 = 1.000 12 = 1.200 14 = 1.400 16 = 1.600 18 = 1.800 20 = 2.000	S= Succhieruola *Strainer* L= Lanterna *Fume seal* B= Bussola intermedia *Additional bushing couple*
V4B3	**C**	**T**	**1**	**06**	**L**

EASYP-B

SEALLESS VERTICAL PUMP

FEATURES

- PP and PVDF solid construction
- T max exercise: PP 75°C- PVDF 98°C
- Sleeved SS316 or Titanium shaft
- Connections: Socket union
- Gaskets: EPDM for PP, FPM for PVDF
- Pump body with SS or Ti bolts Closure System.
- Single or Three phase electric motor with extended shaft
- Optional PP Drip Proof Motor Fan Cover

APPLICATIONS

- Acid and alkaline solutions with minimal suspended solids
- Electroplating Industry
- PCB Industry
- Chemical Industry

ADVANTAGES

- Dry run capability
- Excellent chemical resistance due to absence of filling materials
- IN and OUT tank installation

		EYP03B	EYP08B	EYP10B	EYP15B	EYP20B	EASYP25B
Electric motor	Type	IE1			IE3		
Rpm	50/60 Hz	2900/3450					
Power	Kw/Hp	0,15/0,18	0,37/0,5	0,7/1	1,1/1,5	1,5/2	2,2/3
I* 230/400V 50 Hz	A	1/0,60	2,1/1,2	3,13/1,8	4,2/2,4	5,4/3,1	7,8/4,5
I* 266/460V 60 Hz	A	1,05/0,63	2,19/1,25	3,2/1,9	4,3/2,5	5,5/3,2	8,1/4,7
Qmax 50 Hz	l/min	45	85	150	260	340	420
Hmax 50 Hz	m	4,5	9	10	15	21	23
Qmax 60 Hz	l/min	50	90	170	280	360	450
Hmax 60 Hz	m	6	13	14	20	23	25
Tmax PP	°C	75					
Tmax PVDF	°C	98					
IN/OUT DN	mm	20/16	32/20	40/25	40/32	50/40	50/40
weight PP*	Kg	5,5	6,5	13	19,5	31	33
weight PVDF*		7	10	15	22	35	37

*Value could change according to motor brand

PUMP IDENTIFICATION							
Model	Pump body	Shaft	Impeller type	Oring	Connections	Motor/Rpm	Optionals
EYP03B EYP08B EYP10B EYP15B EYP20B EYP25B	P = PP V = PVDF	X=AISI 316 T = Titanium	O = Standard 1 = Trimmed for high density 2 = High temp. standard 3 = High temp. Trimmed for high density	E = EPDM V = Viton F = FEP	B = Socket union	A = 50Hz/2900 B = 60Hz/3400	S = Strainer C = Drip proof motor lid
EYP20B	**P**	**X**	**0**	**E**	**T**	**A**	**C**

Exploded View

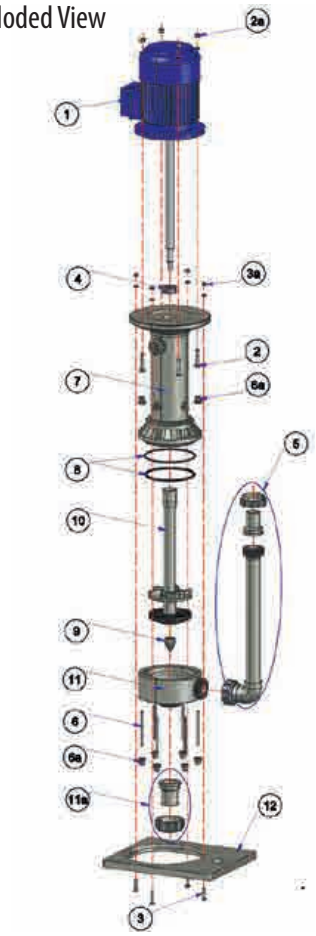

EXPLODED VIEW EASY PUMP	
Part. N.	Description
1	Motor
2	Motor bolt
2a	Motor nut
3	Pump bolt
3a	Pump nut
4	MIMM sealing
5	Outlet pipe
6	Pump housing scerw
6a	Pump housing PP nut
7	Pump column
8	Pump housing O-ring - Set
9	Ogive
10	Impeller shaft
11	Pump housing
11a	Suction attack
12	Pump flange

Performance Curve 50 Hz - Rpm 2800

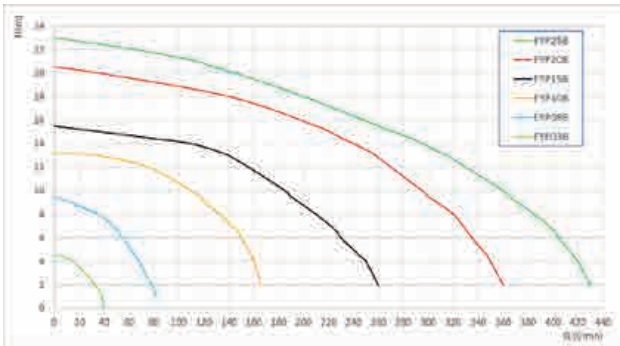

Performance Curve 60 Hz - Rpm 3400

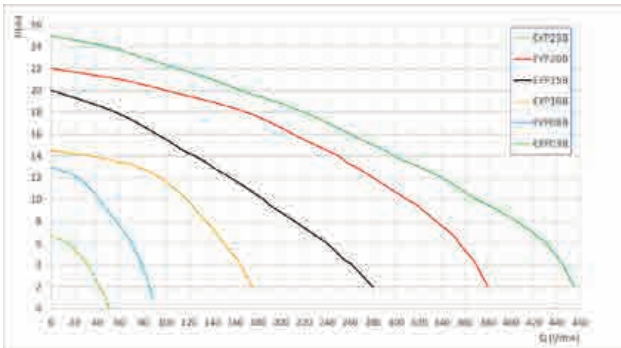

Curves referred to water=20°C

Installation

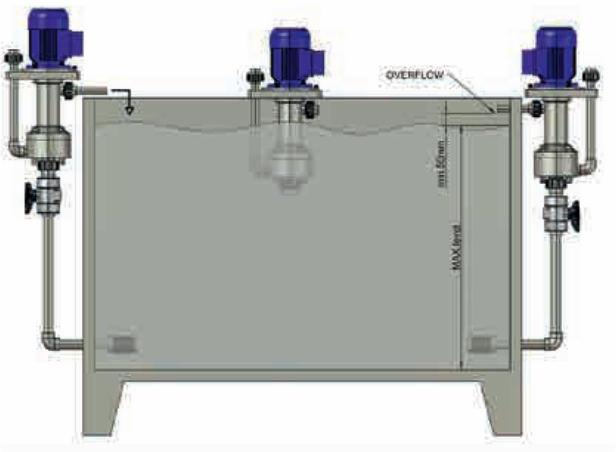

Dimensional drawing

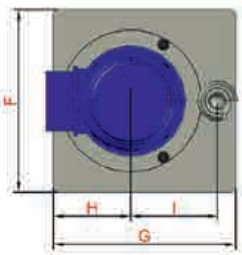

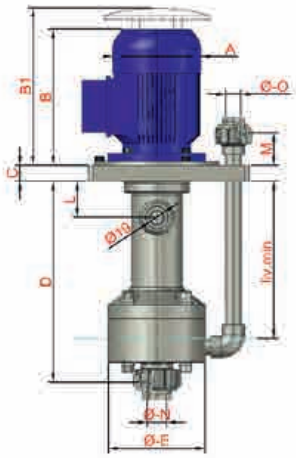

Pump series EASYP-B															
Mod	A	B	B1	C	D	Φ E	F	G	H	I	L	M	Φ n-N	Φ n-O	Liv. Min
EYP03B	110	170	195	20	251	120	200	200	85	95	45	40	25	20	195
EYP08B	120	193	218	20	330	140	220	310	110	108	45	50	40	25	275
EYP10B	135	225	250	20	411	160	250	320	123	130	50	50	50	32	330
EYP15B	175	255	280	20	430	180	290	350	145	142	50	50	50	40	365
EYP20B	175	325	350	30	420	200	320	450	160	220	65	50	63	50	345
EYP25B	175	325	350	30	420	200	320	450	160	220	65	50	63	50	345

LAFONTE.EU may modify data any time, without notice, in order to get product enhancement

lafonte.eu

EASYP-N

SEALLESS VERTICAL PUMP

FEATURES

- PP and PVDF solid construction
- T max exercise: PP 75°C- PVDF 98°C
- Sleeved SS316 or Titanium shaft
- Connections: Threaded or Socket union
- Gaskets: EPDM for PP, FPM for PVDF
- Pump body with threaded closure system, No bolts
- Single or Three phase electric motor with extended shaft
- Optional PP Drip Proof Motor Fan Cover

APPLICATIONS

- Acid and alkaline solutions with minimal suspended solids
- Electroplating Industry
- PCB Industry
- Chemical Industry

ADVANTAGES

- Dry run capability
- Excellent chemical resistance due to absence of filling materials
- IN and OUT tank installation

		EYP03N	EYP08N	EYP10N	EYP15N	EASYP25N
Electric motor	Type	IE1			IE3	
Rpm	50/60 Hz	2900/3450				
Power	Kw/Hp	0,15/0,18	0,37/0,5	0,7/1	1,1/1,5	2,2/3
I* 230/400V 50 Hz	A	1/0,60	2,1/1,2	3,13/1,8	4,2/2,4	7,8/4,5
I* 266/460V 60 Hz	A	1,05/0,63	2,19/1,25	3,2/1,9	4,3/2,5	8,1/4,7
Qmax 50 Hz	l/min	45	85	150	260	420
Hmax 50 Hz	m	4,5	9	10	15	23
Qmax 60 Hz	l/min	50	90	170	280	450
Hmax 60 Hz	m	6	13	14	20	25
Tmax PP	°C	75				
Tmax PVDF	°C	98				
IN/OUT DN	mm	20/16	32/20	40/25	40/32	50/40
weight PP*	Kg	5,5	6,5	13	19,5	33
weight PVDF*	Kg	7	10	15	22	37

*Value could change according to motor brand

PUMP IDENTIFICATION							
Model	Pump body	Shaft	Impeller type	Oring	Connections	Motor/Rpm	Optionals
EYP03N EYP08N EYP10N EYP15N EYP25N	P = PP F = PVDF	X=AISI 316 T = Titanium	O = Standard 1 = Trimmed for high density 2 = High temp. standard 3 = High temp. Trimmed for high density	E = EPDM V = Viton F = FEP	B = Socket union T = Threaded	A = 50Hz/2900 B = 60Hz/3400	S = Strainer C = Drip proof motor lid
EYP15N	**P**	**X**	**0**	**E**	**T**	**A**	**C**

Exploded View

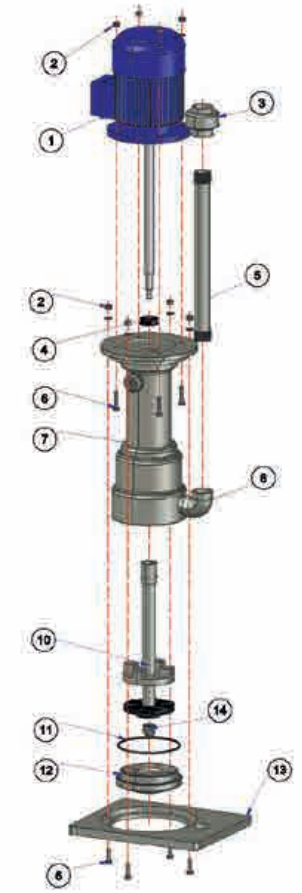

EXPLODED VIEW EASY PUMP	
Part. N.	Description
1	Motor
2	Nut
3	Socket union (std. PVDF)
4	MIMM sealing
5	Outlet pipe
6	Bolt
7	Pump housing
8	Elbow
10	Impeller set
11	Pump housing O-ring
12	Pump head
13	Pump flange
14	Ogive

Performance Curve 50 Hz - Rpm 2800

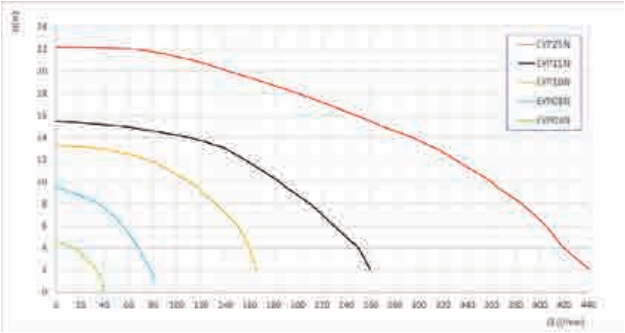

Performance Curve 60 Hz - Rpm 3400

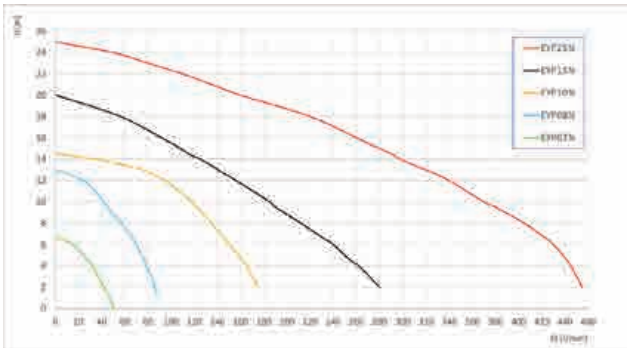

Curves referred to water=20°C

Installation

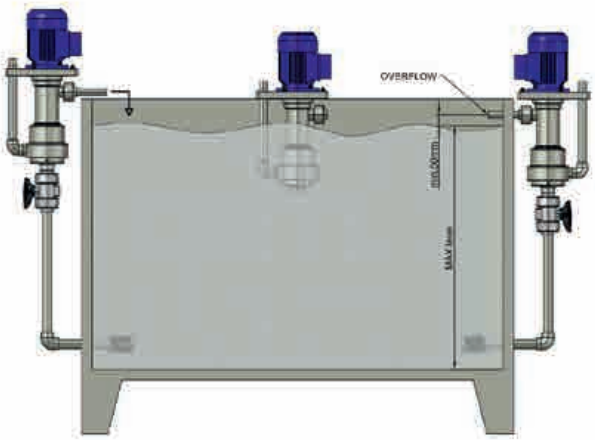

Dimensional drawing

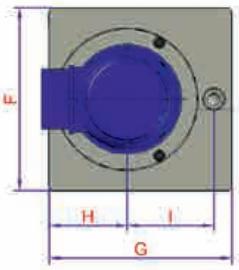

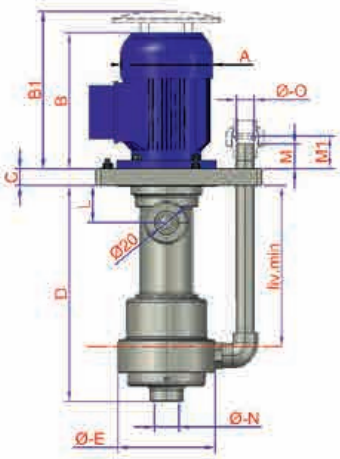

Pump series EASYP-N																
Mod	A	B	B1	C	D	Φ E	F	G	H	I	L	M	M1	Φ n-N	Φ n-O	Liv. Min
EYP03N	110	165	195	20	262	118	200	200	85	95	45	30	40	25	20	195
EYP08N	120	190	218	20	340	140	220	310	110	108	45	40	50	40	25	275
EYP10N	135	225	250	20	410	150	250	320	123	130	50	40	50	50	32	330
EYP15N	175	250	275	20	440	180	290	350	145	142	50	50	50	50	40	365
EYP25N	175	320	350	30	450	200	320	450	160	220	65	50	50	60	50	345

LAFONTE.EU may modify data any time, without notice, in order to get product enhancement

Since 1975 processing Corrosive Solutions

lafonte.eu®

Diaphragm PUMPS

POMPE A MEMBRANA
DIAPHRAGM PUMPS

CU15

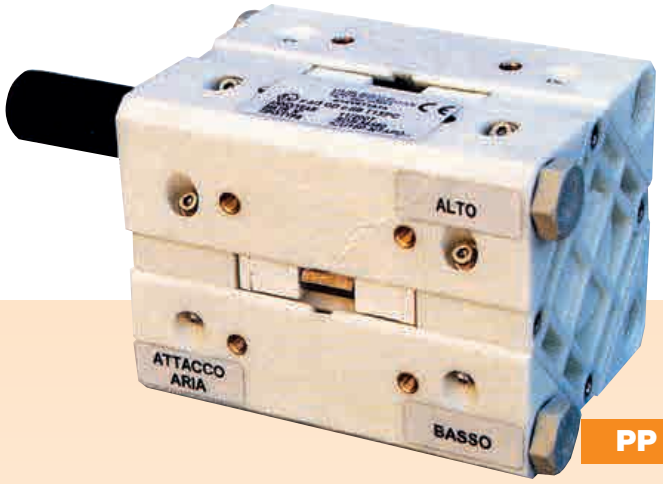

PP

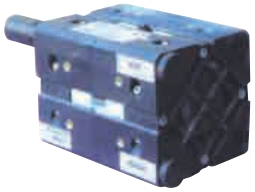

PVDF

DATI TECNICI *TECNICAL DATA*	CU15
Attacchi entrata uscita * *Inlet outlet**	3 / 8" F GAS
Attacco aria *Air connection*	31 / 8" F GAS
Capacità autoadescamento** *Max. self-priming capacity***	3 m
Portata Max. ** *Max. flow rate***	17 l/min
Prevalenza Max.** *Total head***	70 m
Pressione Max. alimentazione aria *Max. air supply pressure*	7 bar
Massimo diametro passaggio ammissibile solidi *Max. diameter of passing solids (spherical particles)*	0,5 mm

Mod. *Mod.*	Materiali di costruzione *Construction materials*	Peso *Weight*	Max. operating temp. *Max. operating temp.*
CU15	PP	1 Kg	60°C
	PVDF	1,5 Kg	95°C

POMPE A MEMBRANA
DIAPHRAGM PUMPS

CU15

DIMENSIONI
DIMENSIONS

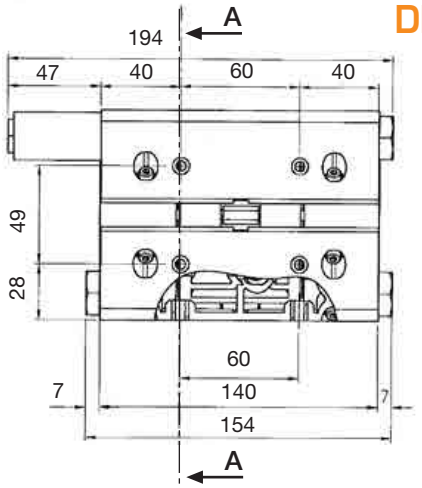

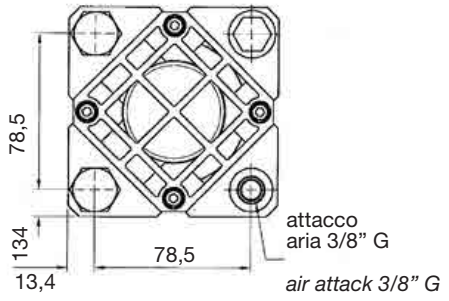

CU15

CURVE
PERFORMANCE

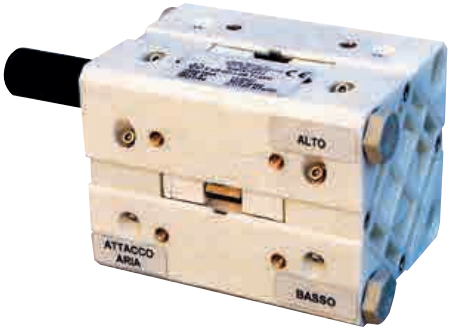

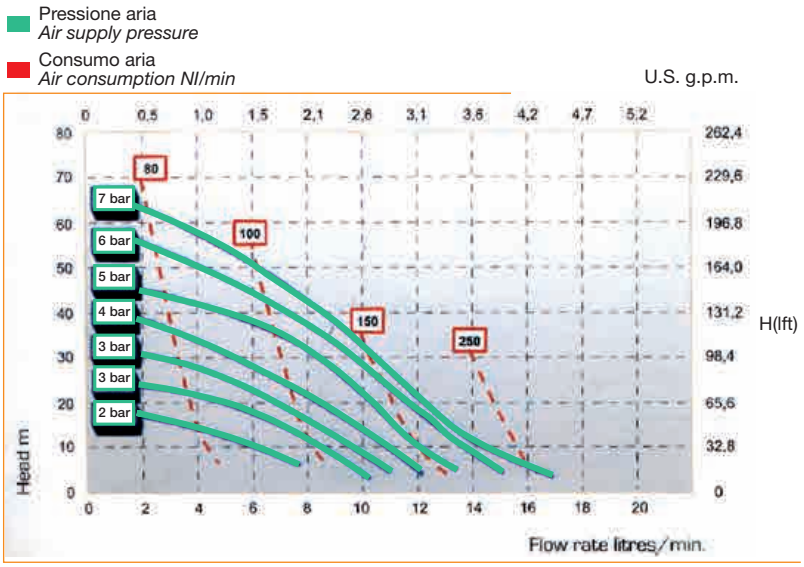

TABELLA MATERIALI — *PUMP MATERIALS*

Modello *Model*	Corpo pompa *Pump body*	Membrana lato aria *Membrane air side*	Membrana PTFE *Membrane PTFE*	Sfere *Balls*	Sedi sfere *Balls housing*	O-ring *O-ring*	Collettore sdoppiato *Twin manifold*
CU15	P = PP F = PVDF AL = Alluminio *Alluminium* A = AISI 316 *ss 316*	N = NBR D = EPDM H = Hytrel M = Santoprene	T= Quando richiesto *T = When required*	T= PTFE A = AISI 316 *ss 316* C = Ceramica *Ceramic* G = Vetro *Glass* N = NBR D = EPDM	P = PP F = PVDF A = AISI 316 *ss 316* I = HMW R = PPS-V	D = EPDM V = Viton S = Silicone N = NBR T = PTFE	X = Quando richiesto *X = When required*

POMPE A MEMBRANA
DIAPHRAGM PUMPS
MCB - BX05

PVDF

PP

ALU

AISI 316

DATI TECNICI *TECNICAL DATA*	MCB	BX05
Attacchi entrata uscita * *Inlet outlet**	1 / 2" F GAS	1 / 2"F GAS
Attacco aria *Air connection*	1 / 4" F GAS	3 / 8"F GAS
Capacità autoadescamento** *Max. self-priming capacity***	6 m	5 m
Portata Max. ** *Max. flow rate***	30 l/min	50 l/min
Prevalenza Max.** *Total head***	70 m	70 m
Pressione Max. alimentazione aria *Max. air supply pressure*	7 bar	7 bar
Massimo diametro passaggio ammissibile solidi *Max. diameter of passing solids (spherical particles)*	2 mm	4 mm

Mod. *Mod.*	Materiali di costruzione *Construction materials*	Peso *Weight*	Max. operating temp. *Max. operating temp.*
MCB	PP	1,6 Kg	60°C
	PVDF	1,9 Kg	95°C
	Alu	2 Kg	95°C
	Aisi 316	3,8 Kg	95°C
BX05	PP	3,6 Kg	60°C
	PVDF	4,2 Kg	95°C
	Alu	4 Kg	95°C
	Aisi 316	6,5 Kg	95°C

* Attacchi flange a richiesta
Flanged attacks on request

** Dipende dai materiali costruttivi
Depends on used material

MCB

POMPE A MEMBRANA
DIAPHRAGM PUMPS

BX05

DIMENSIONI
DIMENSIONS

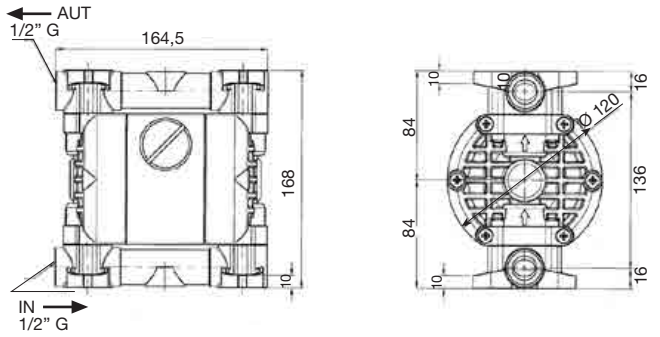

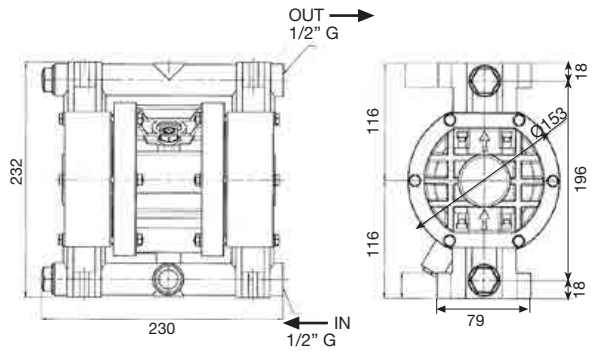

MCB — CURVE / PERFORMANCE — BX05

Pressione aria
Air supply pressure

Consumo aria
Air consumption Nl/min

U.S. g.p.m.

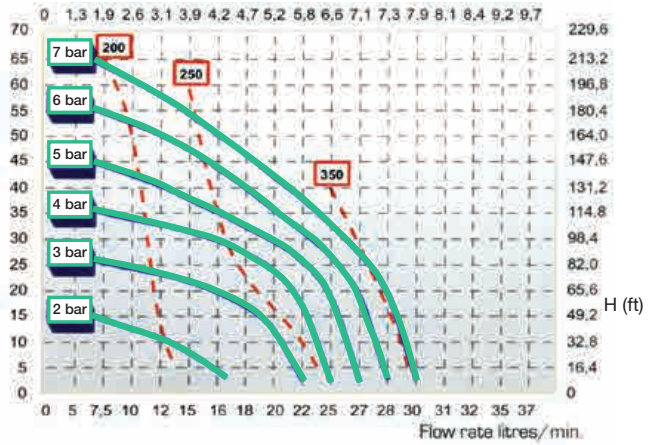

Pressione aria
Air supply pressure

Consumo aria
Air consumption Nl/min

U.S. g.p.m.

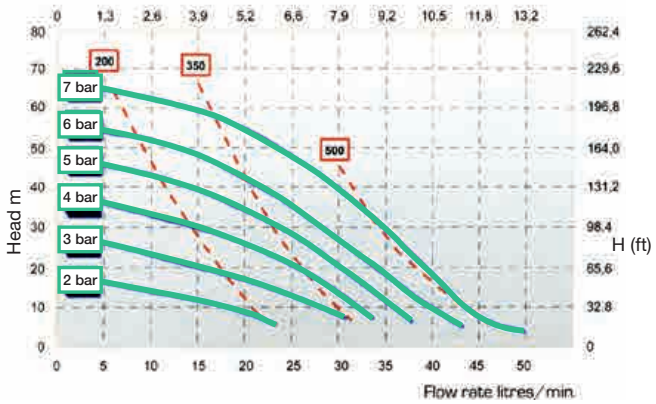

TABELLA MATERIALI — *PUMP MATERIALS*

Modello *Model*	Corpo pompa *Pump body*	membrana lato aria *Membrane air side*	Membrana PTFE *Membrane PTFE*	Sfere *Balls*	Sedi sfere *Balls housing*	O-ring *O-ring*	Collettore sdoppiato *Twin manifold*
MCB **BX05**	P = PP F = PVDF AL = Alluminio *Alluminium* A = AISI 316 *ss 316*	N = NBR D = EPDM H = Hytrel M = Santoprene	T= Quando richiesto *T = When required*	T= PTFE A = AISI 316 *ss 316* C = Ceramica *Ceramic* G = Vetro *Glass* N = NBR D = EPDM	P = PP F = PVDF A = AISI 316 *ss 316* I = HMW R = PPS-V	D = EPDM V = Viton S = Silicone N = NBR T = PTFE	X = Quando richiesto *X = When required*

POMPE A MEMBRANA
DIAPHRAGM PUMPS

BX09-BX10

PP

PVDF

AISI 316

ALU

DATI TECNICI *TECNICAL DATA*	BX09	BX10
Attacchi entrata uscita * *Inlet outlet**	1" GAS	1" GAS
Attacco aria *Air connection*	3 / 8" F GAS	1 / 2" F GAS
Capacità autoadescamento** *Max. self-priming capacity***	6 m	5 m
Portata Max. ** *Max. flow rate***	100 l/min	150 l/min
Prevalenza Max.** *Total head***	70 m	70 m
Pressione Max. alimentazione aria *Max. air supply pressure*	7 bar	7 bar
Massimo diametro passaggio ammissibile solidi *Max. diameter of passing solids (spherical particles)*	4 mm	4 mm

Mod. *Mod.*	Materiali di costruzione *Construction materials*	Peso *Weight*	Max. operating temp. *Max. operating temp.*
BX09	PP	5 Kg	60°C
	PVDF	6,5 Kg	95°C
	Alu	6,5 Kg	95°C
	Aisi 316	10,5 Kg	95°C
BX10	PP	7,5 Kg	60°C
	PVDF	8,5 Kg	95°C
	Alu	8,2 Kg	95°C
	Aisi 316	11 Kg	95°C

* Attacchi flange a richiesta
Flanged attacks on request

** Dipende dai materiali costruttivi
Depends on used material

BX09 POMPE A MEMBRANA BX10
DIAPHRAGM PUMPS

DIMENSIONI
DIMENSIONS

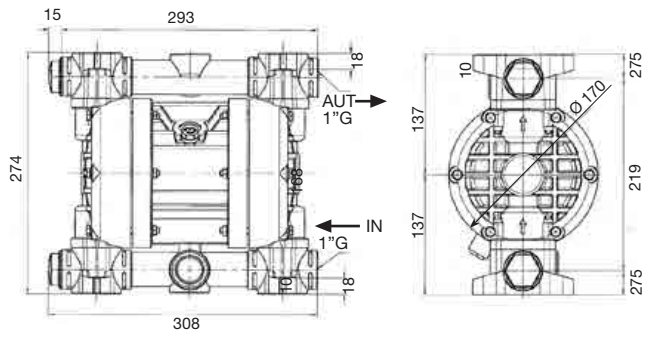

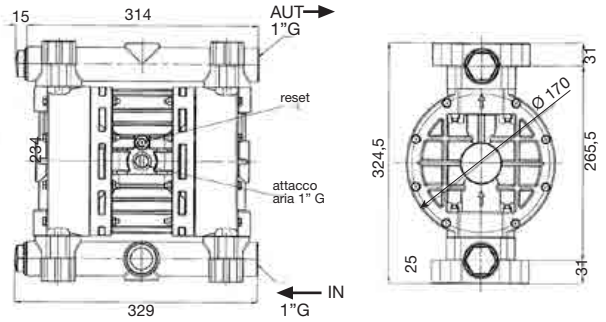

CURVE
PERFORMANCE

BX09

Pressione aria
Air supply pressure

Consumo aria
Air consumption Nl/min

U.S. g.p.m.

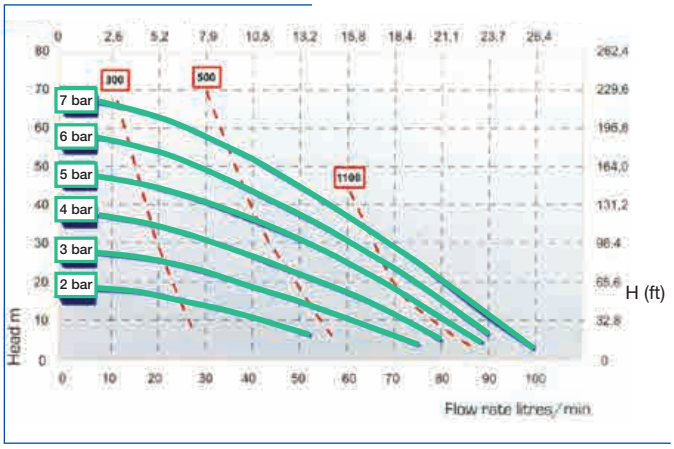

BX10

Pressione aria
Air supply pressure

Consumo aria
Air consumption Nl/min

U.S. g.p.m.

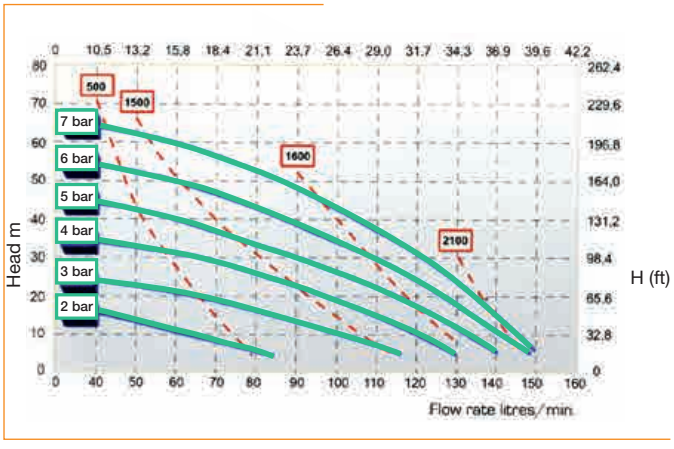

TABELLA MATERIALI *PUMP MATERIALS*

Modello *Model*	Corpo pompa *Pump body*	membrana lato aria *Membrane air side*	Membrana PTFE *Membrane PTFE*	Sfere *Balls*	Sedi sfere *Balls housing*	O-ring *O-ring*	Collettore sdoppiato *Twin manifold*
BX09 **BX10**	P = PP F = PVDF AL = Alluminio *Alluminium* A = AISI 316 *ss 316*	N = NBR D = EPDM H = Hytrel M = Santoprene	T= Quando richiesto *T = When required*	T= PTFE A = AISI 316 *ss 316* C = Ceramica *Ceramic* G = Vetro *Glass* N = NBR D = EPDM	P = PP F = PVDF A = AISI 316 *ss 316* I = HMW R = PPS-V	D = EPDM V = Viton S = Silicone N = NBR T = PTFE	X = Quando richiesto *X = When required*

POMPE A MEMBRANA
DIAPHRAGM PUMPS

BX15-BX26

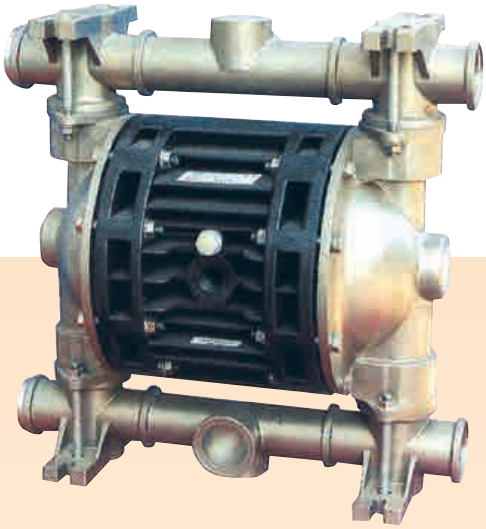

AISI 316

PP

PVDF

ALU

DATI TECNICI *TECNICAL DATA*	BX15	BX26
Attacchi entrata uscita * *Inlet outlet**	1"1/4 GAS	1"1/2 GAS
Attacco aria *Air connection*	1 / 2" F GAS	1 / 2" F GAS
Capacità autoadescamento** *Max. self-priming capacity***	5 m	5 m
Portata Max. ** *Max. flow rate***	220 l/min	340 l/min
Prevalenza Max.** *Total head***	70 m	70 m
Pressione Max. alimentazione aria *Max. air supply pressure*	7 bar	7 bar
Massimo diametro passaggio ammissibile solidi *Max. diameter of passing solids (spherical particles)*	5 mm	6 mm

Mod. *Mod.*	Materiali di costruzione *Construction materials*	Peso *Weight*	Max. operating temp. *Max. operating temp.*
BX15	PP	12 Kg	60°C
	PVDF	14 Kg	95°C
	Alu	16 Kg	95°C
	Aisi 316	21 Kg	95°C
BX26	PP	16 Kg	60°C
	PVDF	20 Kg	95°C
	Alu	21 Kg	95°C
	Aisi 316	32 Kg	95°C

* Attacchi flange a richiesta
Flanged attacks on request

** Dipende dai materiali costruttivi
Depends on used material

BX15 POMPE A MEMBRANA DIAPHRAGM PUMPS BX26

DIMENSIONI
DIMENSIONS

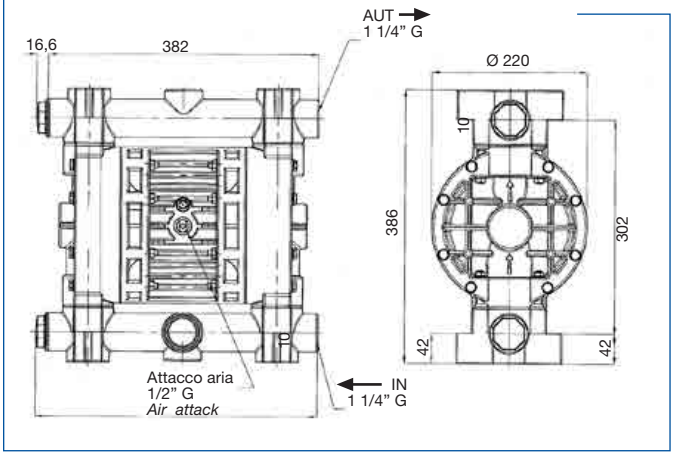

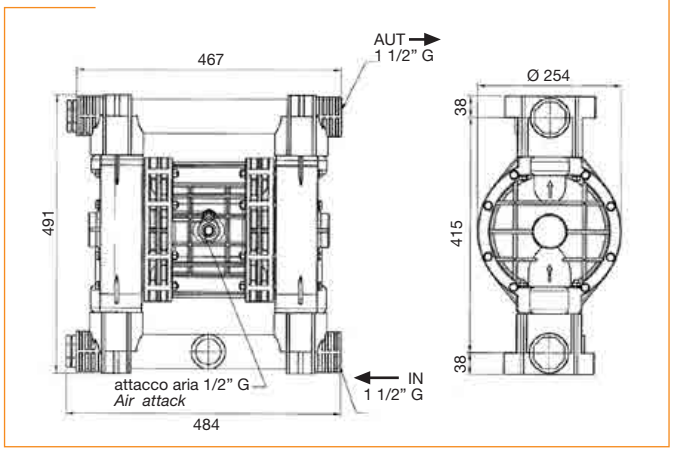

CURVE
PERFORMANCE

BX15 BX26

Pressione aria
Air supply pressure

Consumo aria
Air consumption Nl/min

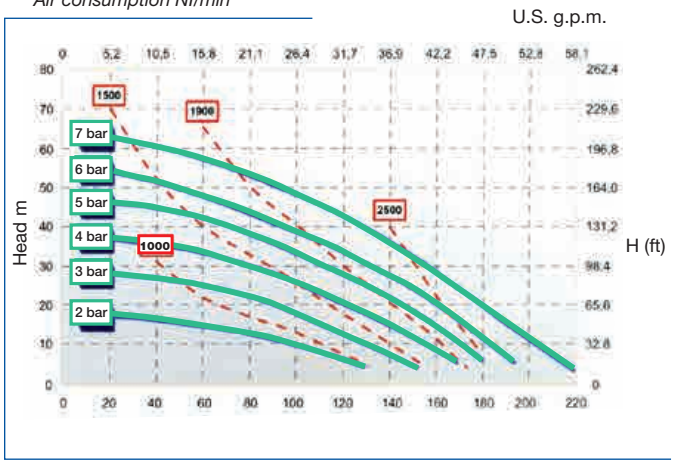

Pressione aria
Air supply pressure

Consumo aria
Air consumption Nl/min

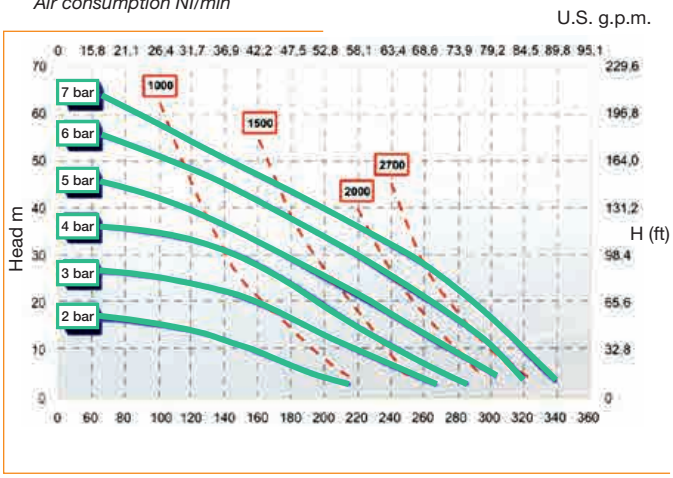

TABELLA MATERIALI *PUMP MATERIALS*

Modello *Model*	Corpo pompa *Pump body*	membrana lato aria *Membrane (air side)*	Membrana PTFE *Membrane PTFE*	Sfere *Balls*	Sedi sfere *Balls housing*	O-ring *O-ring*	Collettore sdoppiato *Twin manifold*
BX15 **BX26**	P = PP F = PVDF AL = Alluminio *Alluminium* A = AISI 316 *ss 316*	N = NBR D = EPDM H = Hytrel M = Santoprene	T= Quando richiesto *T = When required*	T= PTFE A = AISI 316 *ss 316* C = Ceramica *Ceramic* G = Vetro *Glass* N = NBR D = EPDM	P = PP F = PVDF A = AISI 316 *ss 316* I = HMW R = PPS-V	D = EPDM V = Viton S = Silicone N = NBR T = PTFE	X = Quando richiesto *X = When required*

POMPE A MEMBRANA
DIAPHRAGM PUMPS

BX50-BX51

PVDF

PP

DATI TECNICI *TECNICAL DATA*	BX50	BX51
Attacchi entrata uscita * *Inlet outlet**	2" F GAS	G3" F GAS
Attacco aria *Air connection*	G1 / 2" F	G3 / 4" F
Capacità autoadescamento** *Max. self-priming capacity***	4 m	5 m
Portata Max. ** *Max. flow rate***	650 l/min	900 l/min
Prevalenza Max.** *Total head***	70 m	70 m
Pressione Max.alimentazione aria *Max. air supply pressure*	7 bar	7 bar
Massimo diametro passaggio ammissibile solidi *Max. diameter of passing solids (spherical particles)*	8 mm	10 mm

Mod. *Mod.*	Materiali di costruzione *Construction materials*	Peso *Weight*	Max. operating temp. *Max. operating temp.*
BX50	PP	12 Kg	60°C
	PVDF	14 Kg	95°C
BX51	PP	16 Kg	60°C
	PVDF	20 Kg	95°C

* Attacchi flange a richiesta
Flanged attacks on request

** Dipende dai materiali costruttivi
Depends on used material

BX50 POMPE A MEMBRANA BX51
DIAPHRAGM PUMPS

DIMENSIONI
DIMENSIONS

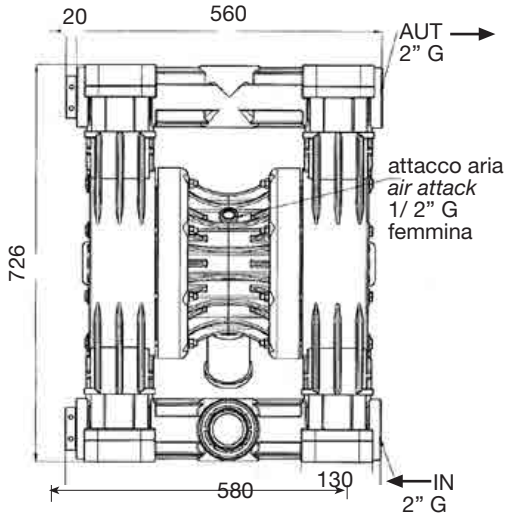

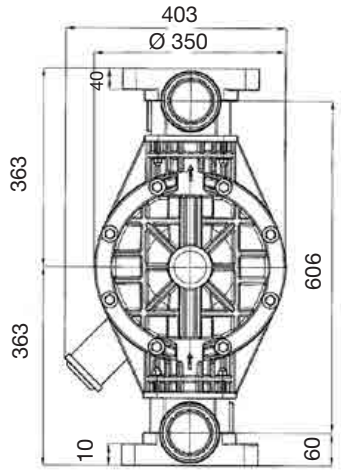

BX50 CURVE PERFORMANCE BX51

Pressione aria
Air supply pressure

Consumo aria
Air consumption Nl/min

U.S. g.p.m.

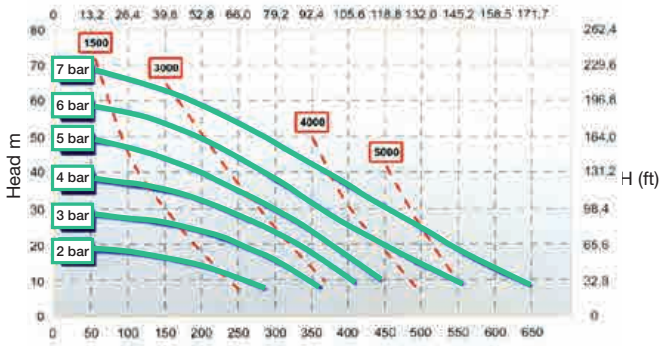

Pressione aria
Air supply pressure

Consumo aria
Air consumption Nl/min

U.S. g.p.m.

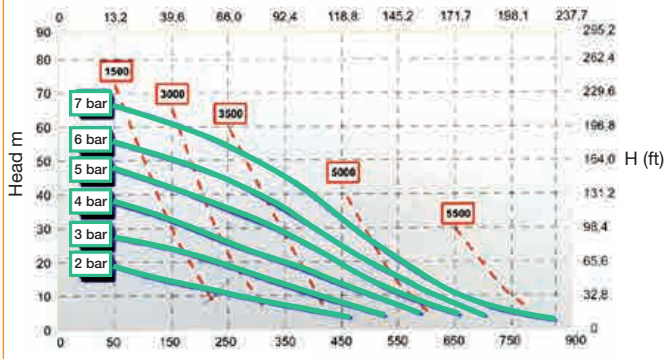

TABELLA MATERIALI *PUMP MATERIALS*

Modello *Model*	Corpo pompa *Pump body*	membrana lato aria *Membrane air side*	Membrana PTFE *Membrane PTFE*	Sfere *Balls*	Sedi sfere *Balls housing*	O-ring *O-ring*	Collettore sdoppiato *Twin manifold*
BX50 **BX51**	P = PP F = PVDF AL = Alluminio *Alluminium* A = AISI 316 *ss 316*	N = NBR D = EPDM H = Hytrel M = Santoprene	T= Quando richiesto *T = When required*	T= PTFE A = AISI 316 *ss 316* C = Ceramica *Ceramic* G = Vetro *Glass* N = NBR D = EPDM	P = PP F = PVDF A = AISI 316 *ss 316* I = HMW R = PPS-V	D = EPDM V = Viton S = Silicone N = NBR T = PTFE	X = Quando richiesto *X = When required*

Since 1975 processing Corrosive Solutions

lafonte.eu®

Drum PUMPS

lafonte.eu

FL

DRUM PUMP

The drum pumps FL are especially suitable for pumping comparably small quantities out of containers such as canisters or drums of up to 200 litre.
The outer tube diameter (max 32mm) allows pumping even out of narrow openings.

FEATURES

- Battery Model: completely wireless
- Brushless motor
- Motor with quickly replaceable storage battery
- Very short charging times
- Constant speed over entire battery service life
- Battery motor and pump connected by means of quick-action coupling
- Ergonomic design motor handle
- Small outer tube diameter
- Low overall weight
- Protection class IP 44
- Available also with Main Connection (cable) Motor
- Inner shaft in Hastelloy

TECHNICAL DATA

Pump	FL
Seal type	sealless
Outer tube materials	PP / PVDF
Outside diametere in mm	32 (PP)
	25 (PVDF)
Immersion lenght	500 / 700 / 1000 / 1200** mm
Viscosity max.	250 mPas
Delivery rate*	max. 57 l/min.

* measured at pump discharge with water (20°C.)
** 1200 mm available only PP

PUMP IDENTIFICATION

Model	Pump		Model	Motor
	Material	h (mm)		
FL	PP = **P** PVDF = **F**	500 = **0500** 700 = **0700** 1.000 = **1000** 1.200* = **1200**	FL	Line Motor (220V) = **FEMA** Battery Motor = **FBMA** Battery Motor + Battery + Charger = **KBAA**
FL	**P**	**0500**	**FL**	**KBAA**

PVDF-25

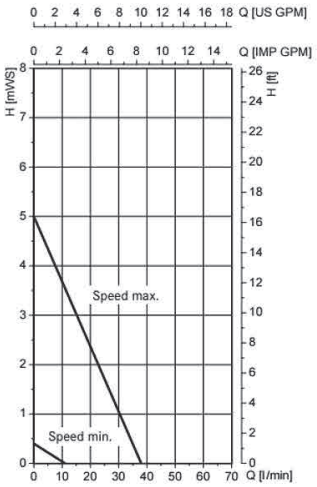

PP-32

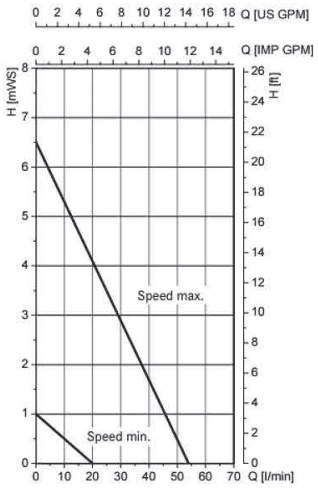

Speed min. 5.000 rpm, speed max. 15.000 rpm

* measured with free outlet, water at 20°C, values ± 10%
** measured with water at 20°C

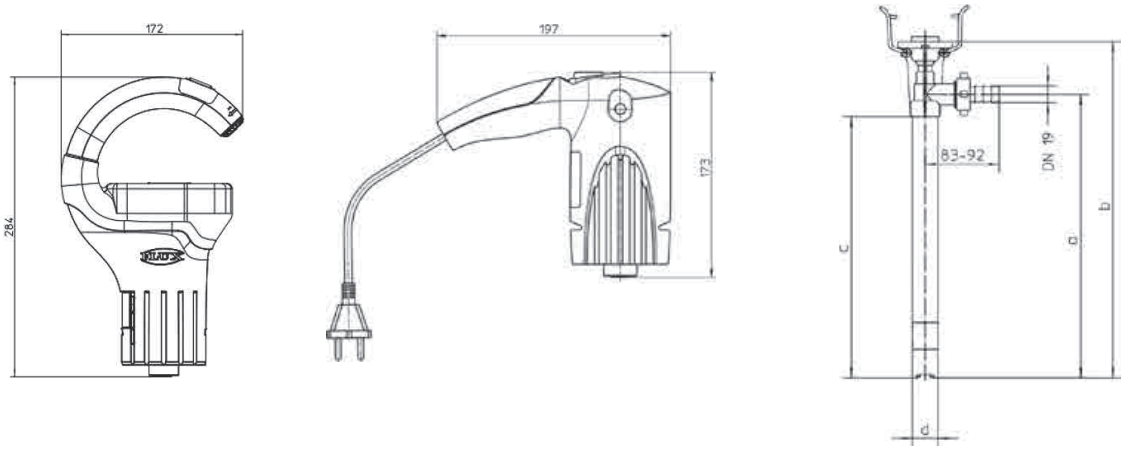

Immersion length	a	b	c	d
1.200	1.200	1.538	1.172	Ø 32
1.000	1.000	1.338	972	
700	700	1.038	672	
500	500	838	472	

Dimensions in mm

LAFONTE.EU may modify data any time, without notice, in order to get product enhancement

PF Series

POMPE da TRAVASO
DRUM PUMPS

CARATTERISTICHE
PERFORMANCE

- Capacità di lavorare a secco
- Travaso acidi alcalini ed infiammabili
- Peso specifico fino a 1,8 Kg/dm^3
- Intercambiabilità tubi - motori
- Materiali: PP - PVDF e AISI 316
- Lunghezze del pescante: 700 ÷ 1000 ÷ 1200 mm
- Motori: 50/60H - 115/230 V

- Seal less pump
- Handles acid, caustic & flammables
- Up to 1,8 sg.
- Tube & Motor interchangeable
- Materials: PP - PVDF and 316 SS
- Lenght: 700 ÷ 1000 ÷ 1200 mm
- Continuos duty motor: 50/60Hz - 115 or 230 Vac

Motore elettrico *Electric motor* 50/60Hz	Motore ad aria *Air motor*
150 l/min	112 l/min
24 m	18 m
500 cps max	330 cps max

Motore elettrico - *Elettric motor*

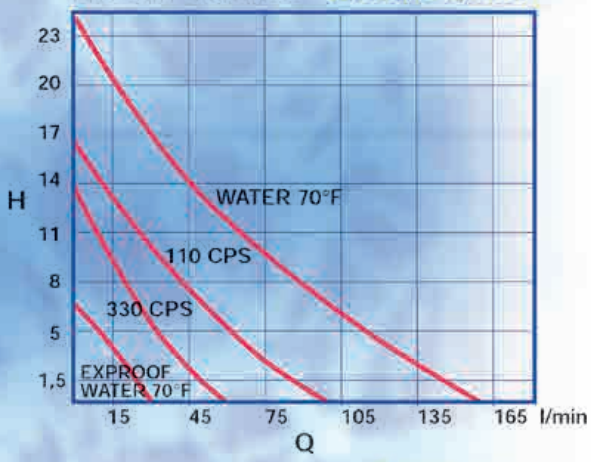

Motore ad Aria - *Air motor*

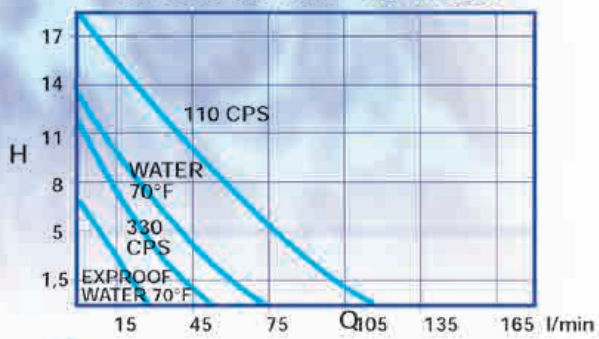

la fonte srl.it

PF Series

POMPE da TRAVASO
DRUM PUMPS

GAMBO - *TUBE*							
Mod.	TUBO - *TUBE*			Tenuta *Seal*	Albero *Schaft*	Interni *Internals*	Uscita Ø *Outlet Ø*
	Materiale *Material*	Ø mm	L. mm				
PFP	Polypropylene	51	700-1000-1200	Senza tenuta *Seal less*	Halloy 625	Polipropilene - PTFE PVDF - VITON	32
PFV	PVDF	51	700-1000-1200	Senza tenuta *Seal less*	Halloy 625	PVDF - PTFE - VITON	32
PFS	AISI316	51	700-1000-1200	Senza tenuta *Seal less*	SS	STAINLESS STELL PTFE - TEFZEL - VITON	32

SPECIFICHE MOTORI - *MOTOR FEATURES*					
Mod.	Tipo *Type*	Certificazione *Certifications*	Requisiti elettrici *Electrical requirements*	HP *KW*	RPM
M5	Splashproof IP44	CE	230VAC/50-60 Hz	0,35	10,000
M5T	TEFC IP54	CE	230VAC/50-60 Hz	0,35	10,000
M5X	EXP - IP54 EExd TTA, T4	CE - Ex DEMKO-TUV	230VAC/50-60Hz	0,07	5,000
M6	Air	CE		0,25	300 - 6,000
M6X	Exproof Air	CE		0,55	300 - 3,000

ESPLOSO GAMBO PF - *PF SERIES EXPLODED VIEW*

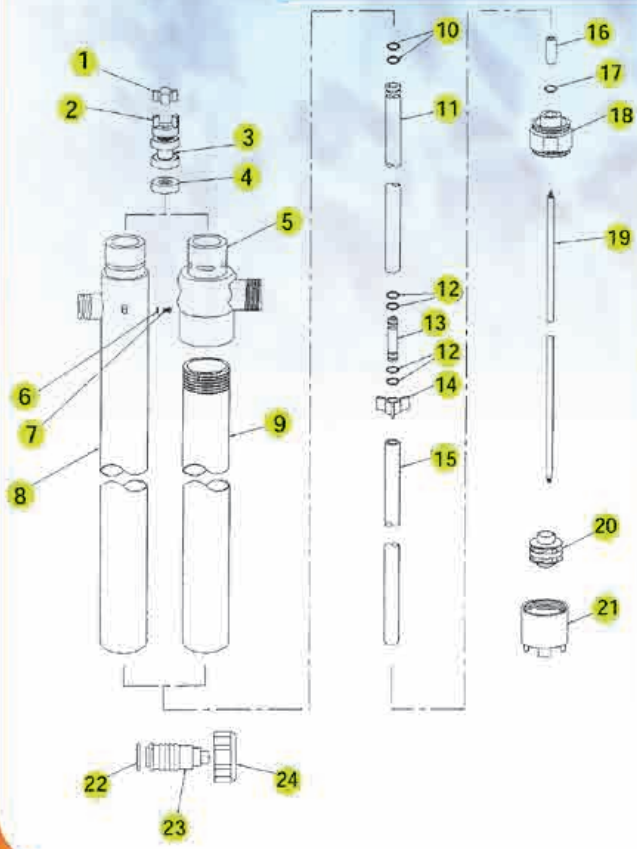

1 Inserto accoppiamento
2 Giunto
3 Cuscinetto
4 Tenuta vapori PF
5 Testata PF
6 Rondella
7 Vite
8 Tubo PFS
9 Tubo PF
10 O-Ring Tubo rivestimento sup.
11 Tubo rivestimento sup. PF
12 O-Ring bussola intermedia
13 Bussola intermedia
14 Bussola di guida PF
15 Tubo di rivestimento inf. PF
16 Bussola inferiore
17 O-Ring corpo girante
18 Corpo girante PF
19 Albero PF
20 Girante PF
21 Corpo pompa PF
22 O-Ring Portagomma
23 Portagomma PF
24 Ghiera PF

1 coupling insert
2 Half Coupling
3 Bearing Assembly
4 PF Vapor Seal
5 PF Head
6 #8 Brass Lock Washer
7 #8 - 32 x 1/4 Pan HD M/S Brass
8 PFS Intake Tube Assembly
9 PF Intake Tube
10 Upper Inner Tube O-Ring
11 PF Upper Inner Tube
12 Center Bearing O-Ring
13 Center Bearing
14 PF Bearing Guide
15 PF Lower Inner Tube
16 Botton Bearing
17 Impeller Housing O-Ring
18 PF Impeller Housing
19 PF Main Shaft
20 PF Impeller Assembly
21 PF Housing Cover
22 Discharge O-Ring
23 PF Spout
24 PF Discharge Nut

TO Series
POMPE da TRAVASO
DRUM PUMPS

CARATTERISTICHE
PERFORMANCE

- Motore elettrico e pneumatico
- Concezione semplice e robusta
- Per trasferimento acidi ed alcalini
- Peso specifico fino a 1,8 Kg/dm^3
- Materiali: PVC - PP - PVDF
- Organi di tenuta: PTFE - CERAMICA o GRAFITE
- Lunghezze del pescante: da 700 ÷ 900 ÷ 1200 mm

- Electric and air motor
- Easy and solid construction
- Handles acids and caustics chemicals
- Density till 1,8 Kg/dm^3
- Materials: PVC / PP/ PVDF
- Seal: PTFE/CERAMIC or PTFE CARBON
- Lenght: 700 ÷ 900 ÷ 1200 mm

MOTORE PNEUMATICO *AIR MOTOR*	MOTORE MONOFASE *ELECTRICAL MOTOR*
BAR 6 - Kw 0,25	V. 220 Kw 0.25
n° g/min. - RPM 3000	n° g/min. - RPM 2800
PESO: Kg 3	PESO: Kg 6
CONSUMO: Nmc/min. 0,5	CONSUMO: Nmc/min. 0,5

TO Motore elettrico - *Electric motor*

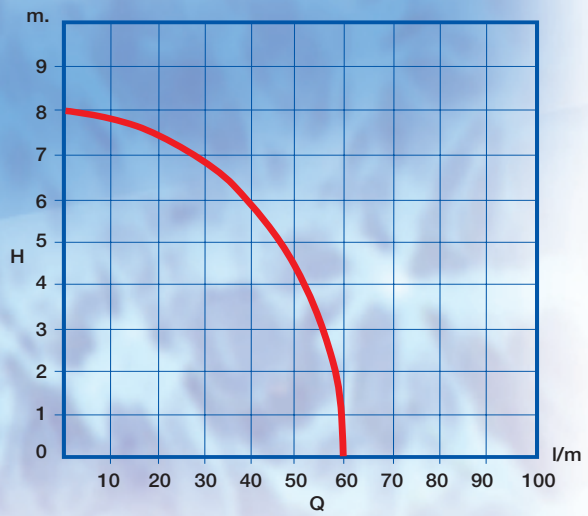

la fonte srl.it

TO Series
POMPE da TRAVASO
DRUM PUMPS

L'impiego di motori a basso numero di giri consente il funzionamento continuo senza sollecitazione eccessiva degli organi in movimento di tenuta.

Use of standard RPM 2800 motors permit to work for long period without stress of rotation & sealing part.

ESPLOSO SERIE TO - *ESPLODED VIEW SERIES TO*

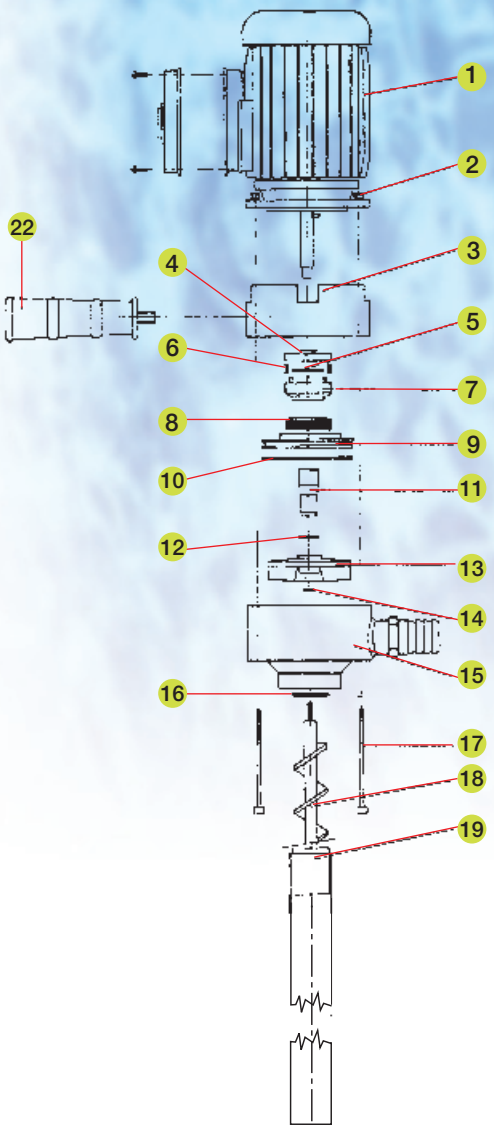

1	Motore	*1*	*Motor*
2	Dado	*2*	*Nut*
3	Flangia	*3*	*Bracket*
4	Collare tenuta	*4*	*Seal stubs*
5	O-Ring tenuta	*5*	*Seal O-Ring*
6	Molla tenuta	*6*	*Seal Spring*
7	Anello rotante	*7*	*Rotating ring*
8	Anello statico	*8*	*Static ring*
9	Sede anello statico	*9*	*Static ring holder*
10	O-Ring corpo pompa	*10*	*Pump housing O-Ring*
11	Bussola porta tenuta	*11*	*Seal bearing holder*
12	O-Ring sup. girante	*12*	*Vaser impeller O-Ring*
13	Girante	*13*	*Impeller*
14	O-Ring inf. girante	*14*	*Lower impeller O-Ring*
15	Corpo pompa	*15*	*Pump housing*
16	O-Ring tubo	*16*	*Tube O-Ring*
17	Vite	*17*	*Bolts screw*
18	Coclea	*18*	*Conveyor*
19	Tubo	*19*	*Outer tube*
22	Maniglia	*22*	*Handle*

Since 1975 processing Corrosive Solutions

lafonte.eu®

FILTRATION SYSTEMS

lafonte.eu

MINI

FILTERING UNIT

FILTER UNITS MINI I

Technical Features:
- Seal less vertical pump
- IN/OUT Tank installation
- Lid fast locking system by PP nut or bolts
- Cartridge tightening indipendant from cylinder length
- Vent valve
- PP and PVDF version
- Tmax exercise 75°C – 95°C PVDF

Advantages:
- Practical
- Versatile
- Rugged construction
- Space Saver
- Drive run capability

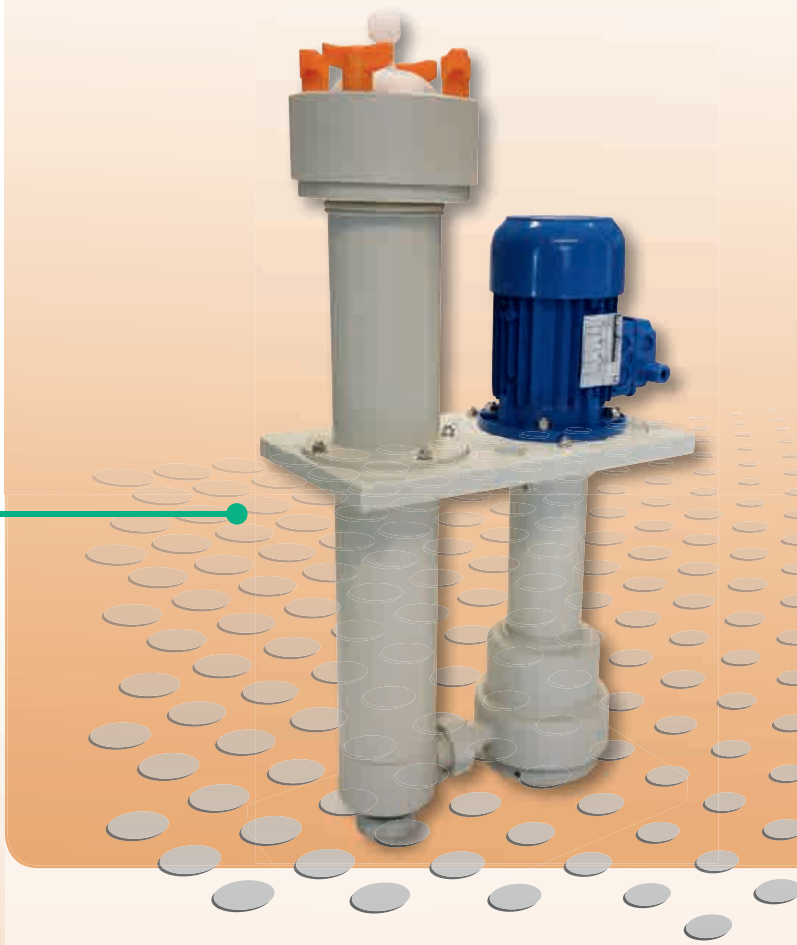

FILTER UNITS MINI N

Technical Features:
- Single phase magnetic drive pump
- Cartridge tightening indipendant from cylinder length
- Lid fast locking system by PP nut
- Vent valve
- Switch, cable and plug incuded with pump motor
- Tmax exercise 60°C

Advantages:
- Practical
- Versatile
- Economical
- Space Saver

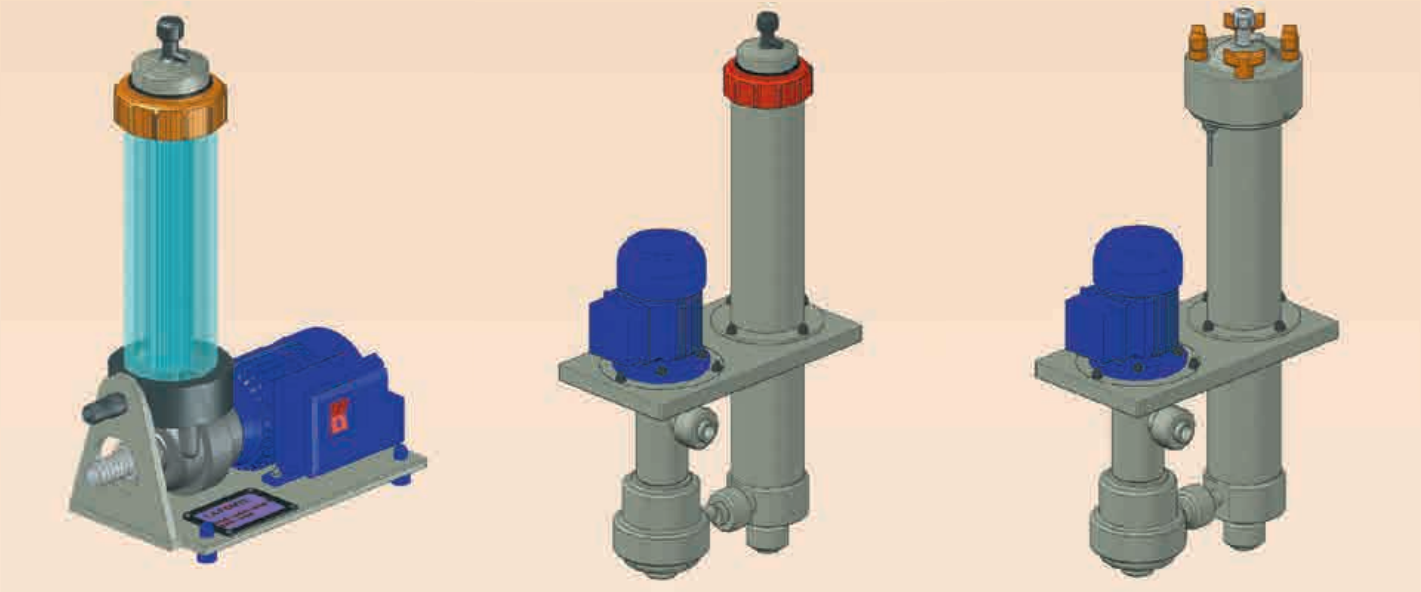

model MINI N | model MINI I - P | model MINI I - G

FILTER UNIT MINI I							
Mod	FILTER CHAMBER				PUMP		OPTIONAL
	MATERIAL	CARTRIDGE H"	VERSION	SERIES	VERTICAL	MATERIAL	TYPE
MINI	_=PP V=PVDF	10 20 30	P=Plus G=Golden	I	EYP3N EYP8N EYP10N	_=PP V=PVDF	I=interlock sensor (only on G version) G=pressure gauge with guard
MINI	V	20	G	I	EYP8N	V	G

FILTER UNIT MINI N						
Mod	FILTER CHAMBER			PUMP		OPTIONAL
	MATERIAL	CARTRIDGE H"	SERIES	MAGNETIC	MATERIAL	TYPE
MINI	_=Plexiglass	4 10	N	MPC042	_=PP V=PVDF	
MINI	10		N	42		

	MPC042	EYP3N	EYP8N	EYP10N
Qmax (l/h)	1800	3000	6500	9600
KW	0,12	0,15	0,37	0,7
A (230/1V)	0,9			
A* (230/400V)		0,77/0,44	1,80/1,00	3,13/1,7

* data can change according with motor brand

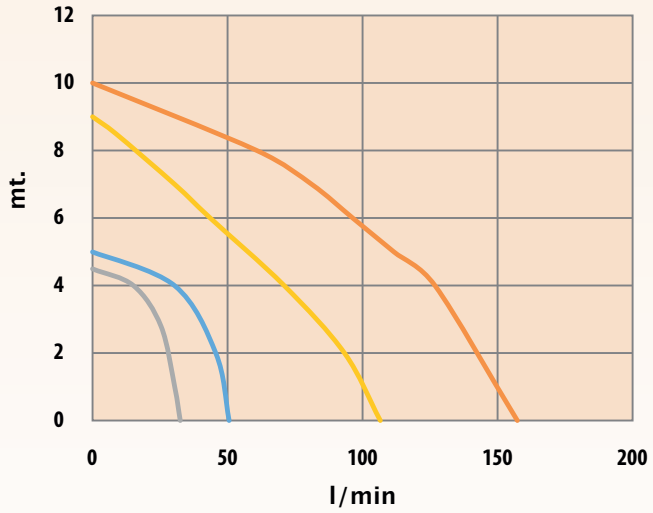

lafonte™.eu

MINI

FILTERING UNIT

MINI Golden

- Magnetic drive pump PP PVDF 0,5 - 7 m³/h
- PP or PVDF solid monoblocc filter housing
- Fast locking by 4 PP M6 handles with bolts closure system
- Drain and vent valve
- Single or double housing version connecte in parallel
- Tmax = 75°C PP - 95°C PVDF
- Cartridge tight indipendant from cylinder lenght
- Waterproof switch

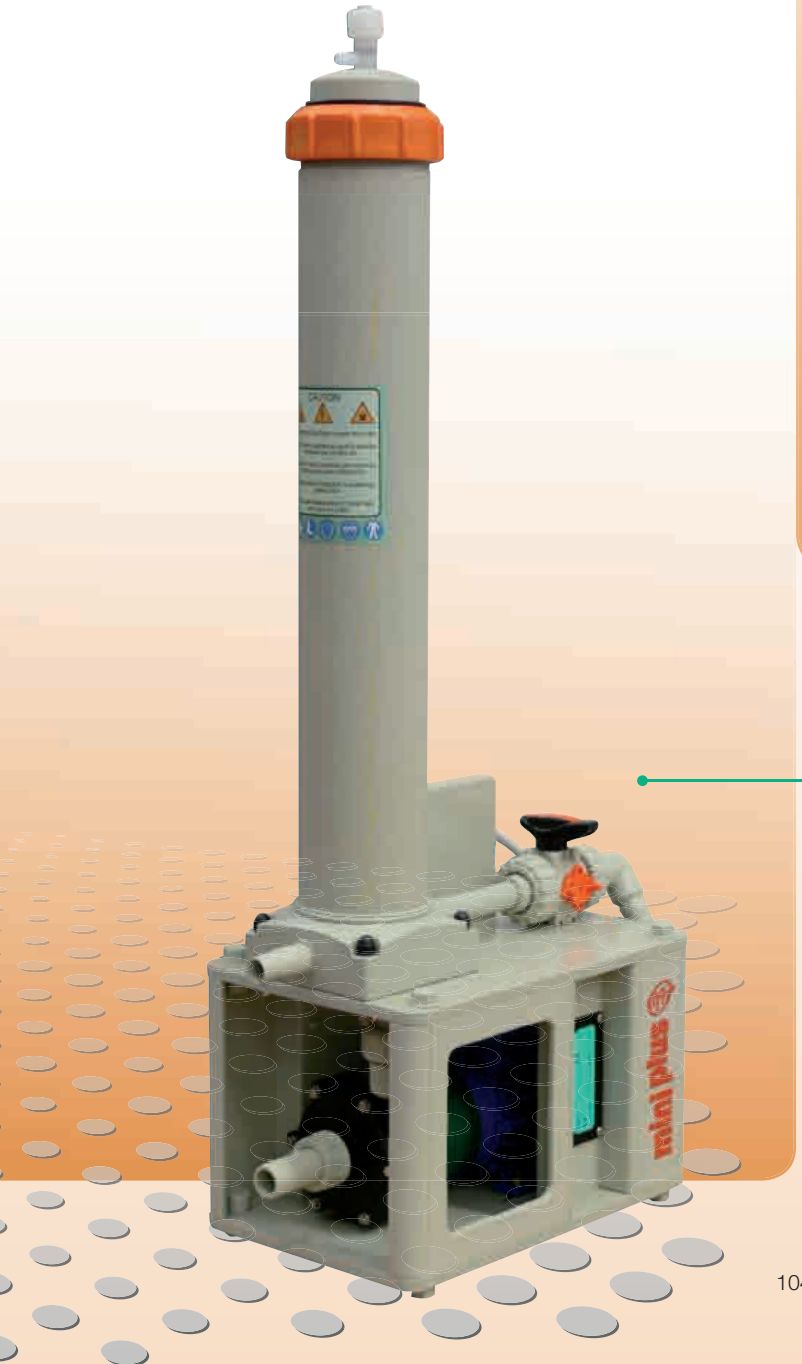

MINI Plus

- Magnetic drive pump PP PVDF 0,5 - 7 m³/h
- PP or PVDF solid monoblocc filter housing
- Plexiglass cylinder version
- Fast pocking by PP nut
- Drain and vent valve
- Single or double housing version connectel in parallel
- Tmax = 60°C Plexiglass - 70°C PP - 95°C PVDF
- Cartridge tight indipendant from cylinder lenght
- Waterproof switch

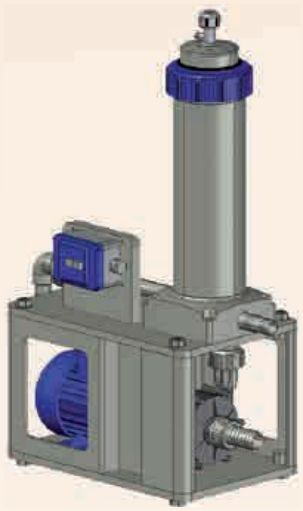

VERSION "MINI P"

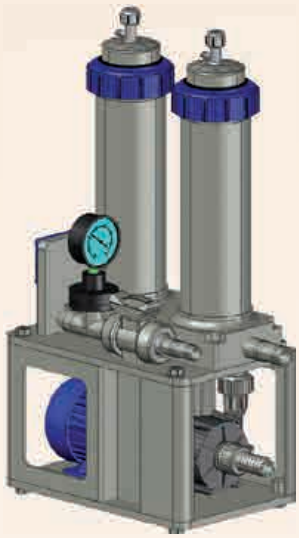

VERSION "MINI 2P"

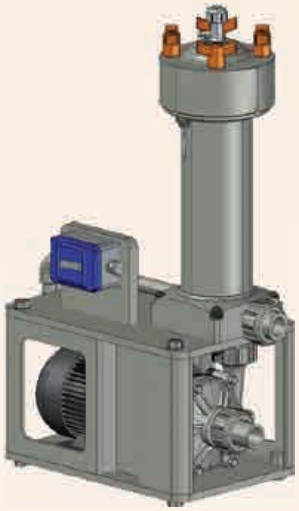

VERSION "MINI G"

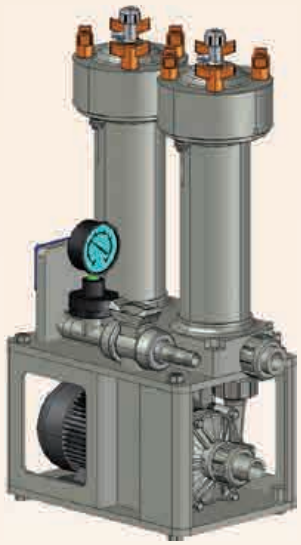

VERSION "MINI 2G"

Mod	FILTER HOUSING					PUMP		OPTIONALS
	MATERIAL	CARTRIDGE H"	VERSION	CHAMBERS N°	CONNECTION	MAGNETIC DRIVE	MATERIAL	TYPE
MINI	_ = PP **V** = PVDF **G** = Plexiglass	**10** **20** **30**	**P** = Plus **G** = Golden	_ = One **2** = Two	**P**=Parallel	**MPC042** **MPP031** **MPP051** **MPP052** **EVT7**	_=PP **F**= PVDF	**I** = interlock lis sensor (Only for version G) **G** = pressure gauge with guard
MINI	V	20	P			EVT7	F	G

50 Hz	EVT7	MPP051 MPP052	MPP031	MPC042
Kw	0,25	0,12	0,09	0,12
A* 230/1V	2,2	0,96	0,48	0,96
A* 230/400V	1,2/0,70	0,77/0,44	0,52/0,30	

* data can change accordind with motor type

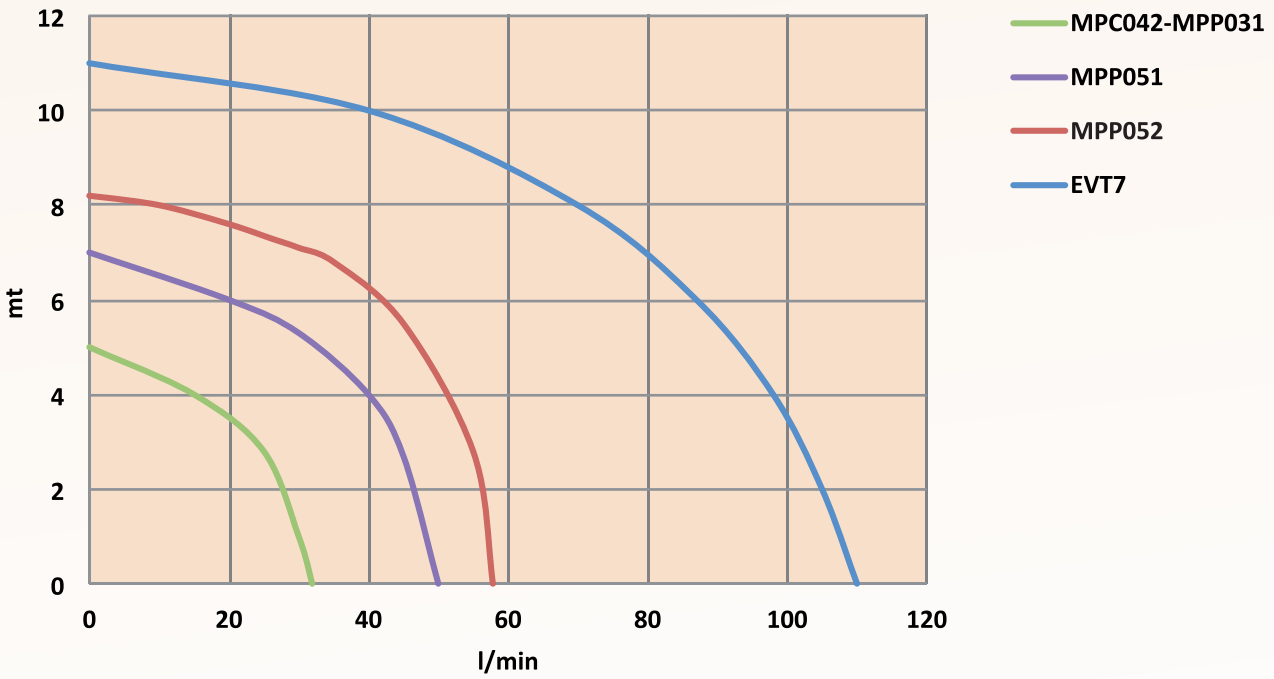

ADVANTAGES

- Ease of operation
- Long life
- Ability to Interchange with several different filtration systems in the same housing
- Ability to change between EVOLUTE magnetic drive and mechanical seal pump
- Three years warranty on filter housing

FEATURES

- Polypropylene machine solid monobloc filter housing
- Tilt lid with swing bolts closure system
- Magnetic drive or mechanical seal pump
- Solid Polypropylene base with discharge pipes and brackets on three side of the base
- Discs version, filter papers: D130/32 mm
- Filter housing improved distribution flow
- Tmax exercise 70°C with 3 Bar pressure

FILTRATION TYPE

Carbon Canister

Discs

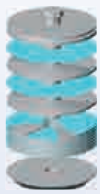

Oilsorb Canister for degreasing process

High flow JUMBO pleated Cartridge

Various Cartridges for different applications

Series	Filter Chamber					Filter Element		Pump			OPTIONAL
	Discs Dxn° (m²/l)*	Cartridges n° x l"	JUMBO DxH" (m²)	Oilsorb (l)	Carbon (l)	Discs	Cartridges	Magnetic Drive	Mechanical Seal	Material	**A** = Suction Valve **M** = Discharge **B** = By pass pump/filter **C** = Carbon treatment valves group **G** = Pressure Guage **V** = Valve between pump and filter **W** = Wheels **I** = Interlock sensor placed on splashproof lid ring
MIX	**3D1** 150x32 (0,55/2)	**3C1** 3x10	**3J1** 150x10 (1,5)			_ = carta **P**= Meraklon **T**= PTFE	_= DOE D63 **M**= DOE with spring closure system **P**=DOE D 70 **A**=SOE 222 **B**=SOE 226	**EVT7**		_=PP **F**= PVDF	
	3D2 150x62 (1,1/4)	**3C2** 3x20	**3J2** 150x20 (3,0)	**3O2** (5)	**3A2** (5)			**EVT7** **EVT12**	**EVM8** **EVM12**		
		3C3 3x30	**3J3** 150x30 (3,0)					**EVT7** **EVT12**	**EVM8** **EVM12**		
MIX	**3C2**							**EVM12**		**F**	**GR**

* m² = Surface area / l = Sediment Volume

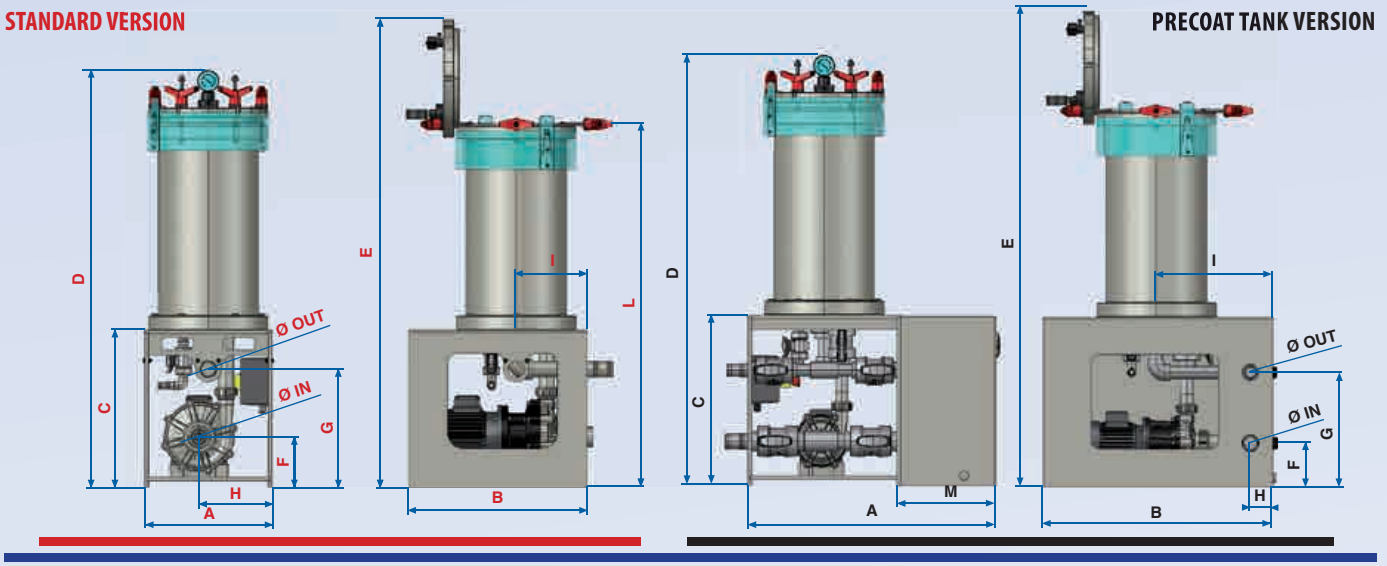

SERIES	HOUSING	PUMP	OVERALL DIMENSION												
			D in	D out	A	B	C	D	E	F	G	H	I	L	M
MIX	3D1 3C1 3J1	EVT7	32	32	295 570	400 480	350 410	800 860	840 900	112 117	245 300	141 65	135 220	730 790	200
	3D2 3C2 3J2 3O2 3A2	EVT7	32	32	295 570	400 480	350 410	1055 1115	1095 1155	112 117	245 300	141 65	135 220	985 1045	200
		EVM8	40 50	32 40	295 670	440 570	400 465	1200 1265	1240 1305	140 145	300 355	166 90	135 272	1035 1100	
		EVT12 EVM12 EVT15 EVM15	50	40											
	3C3 3J3	EVT7	32	32	295 570	400 480	350 410	1315 1380	1355 1420	112 117	245 300	141 65	135 220	1245 1310	200
		EVM8	40 50	32 40	295 670	440 570	400 465	1460 1525	1500 1565	140 145	300 355	166 90	135 272	1295 1360	
		EVT12 EVM12 EVT15 EVM15	50	40											
		EVT20 EVM20			295	500	440	1500	1540	140	300	176	162	1335	

50 Hz

Rpm 2800	EVT7	EVM8	EVT12 EVM12	EVT15 EVM15	EVT20 EVM20
KW	0,25	0,37	0,55	0,7	1,1
A* 230/400V	1,2/0,7	1,8/1,0	2,3/1,25	3,13/1,7	4,9/2,5

* Values could change according with type of used motor

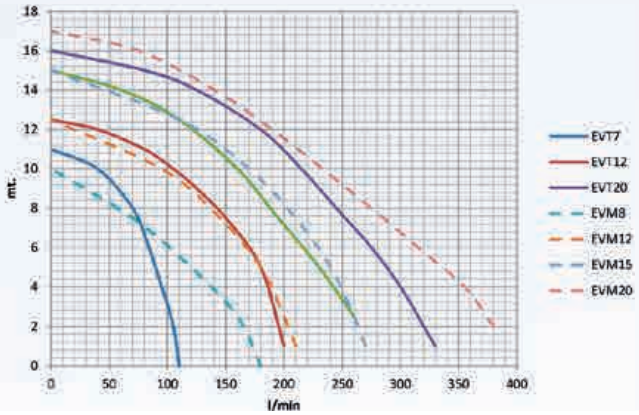

60 Hz

Rpm 3450	EVT7 EVM8	EVT12 EVM12	EVT15 EVM15	EVT20 EVM20
KW	0,37	0,55	0,7	1,1
A* 220/380V	2,6/1,5	2,9/1,7	3,9/2,2	6,0/3,5

* Values could change according with type of used motor

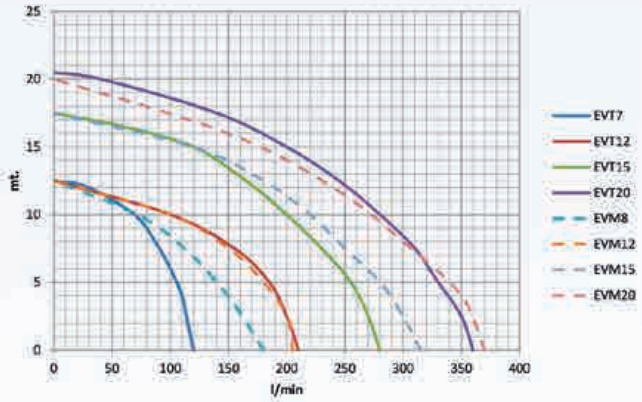

ADVANTAGES

- Ease of operation
- Long life
- Ability to Interchange with several different filtration systems in the same housing
- Ability to change between EVOLUTE magnetic drive and mechanical seal pump
- Three years warranty on filter housing

FEATURES

- Polypropylene machine solid monobloc filter housing
- Tilt lid with swing bolts closure system
- Magnetic drive or mechanical seal pump
- Solid Polypropylene base with discharge pipes and brackets on three side of the base
- Pre coat tank version
- Discs version, filter papers: D205/32 mm
- Filter housing improved distribution flow
- Tmax exercise 70°C with 3 Bar pressure

FILTRATION TYPE

Carbon Canister

Discs

Oilsorb Canister for degreasing process

High flow JUMBO pleated Cartridge

Various Cartridges for different applications

Series	Filter Chamber					Filter Element		Pump			OPTIONALS
	Discs Dxn° (m²/l)*	Cartridges n° x l"	JUMBO DxH" (m²)	Oilsorb (l)	Carbon (l)	Discs	Cartridges	Magnetic Drive	Mechanical Seal	Material	
MIX	**7D1** 200x35 (1/4,3)	**7C1** 7x10	**7J1** 200x10 (2,5)			_ = carta **P**= Meraklon **T**= PTFE	_= DOE D63 **M**= DOE with spring closure system **P**=DOE D 70 **A**=SOE 222 **B**=SOE 226	**EVT7**	**EVM8**	_=PP **F**= PVDF	**A** = Suction Valve **M** = Discharge **B** = By pass pump/filter **C** = Carbon treatment valves group **G** = Pressure Guage **V** = Valve between pump and filter **T** = Prea coat tank **W** = Wheels **I** = Interlock sensor placed on splashproof lid ring
	7D2 200x66 (2/8,6)	**7C2** 7x20	**7J2** 200x20 (5)	**7O2** (15)	**7A2** (15)			**EVT7** **EVT12** **EVT15**	**EVM8** **EVM12** **EVM15**		
		7C3 7x30						**EVT 12** **EVT 15** **EVT20**	**EVM12** **EVM15** **EVM20**		
MIX	**7D1**					**P**		**EVT7**			**GTR**

* m² = Surface area / l = Sediment Volume

STANDARD VERSION

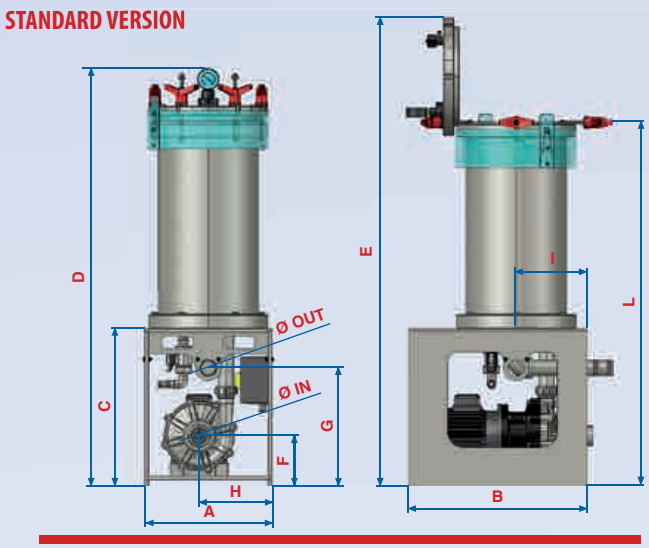

PRECOAT TANK VERSION

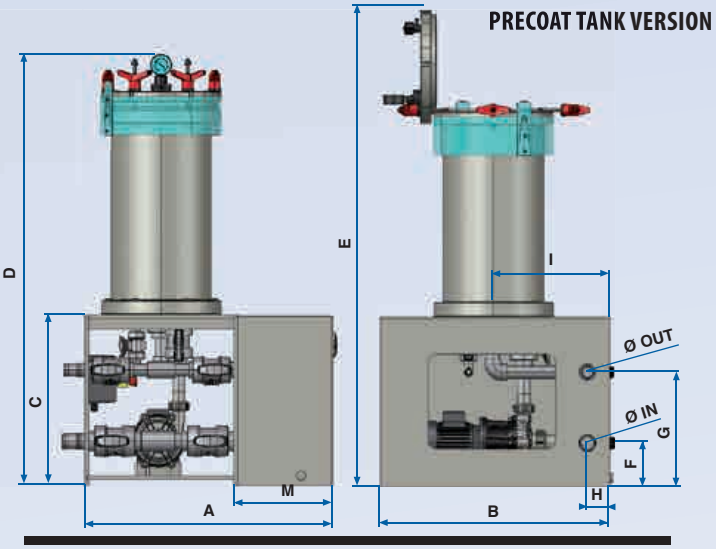

SERIES	HOUSING	PUMP	OVERALL DIMENSION													
			D in	D out	A	B	C	D	E	F	G	H	I	L	M
MIX	7D1 7C1 7J1	EVT7	32	32	340 650	440 500	350 420	920 990	1020 1090	117	245 300	134 65	170 240	750 840	250
		EVM8	40 50	40	395 720	560 600	420	990	1090	145	295	198 90	192 290	840	
	7D2 7C2 7J2 7O2 7A2	EVT7	32	32	340 650	440 500	350 420	1175 1245	1275 1345	117	245 300	134 65	170 301	1005 1095	250
		EVM8	40 50	40 40	395 720	560 600	420 500	1245 1325	1345 1425	145	295 355	179 90	192 290	1095 1175	
		EVT12 EVM12 EVT15 EVM15	50	40											
	7C3	EVT12 EVM12 EVT15 EVM15	50	40	395 720	560 600	420 500	1505 1585	1605 1685	145	295 355	179 90	192 290	1355 1435	250
		EVT20 EVM20	50	50											
		EVT25 EVT30	63	63	395	560	460	1545	1645	162	335	198		1395	

50 Hz

Rpm 2800	EVT7	EVM8	EVT12 EVM12	EVT15 EVM15	EVT20 EVM20	EVT25 EVM25	EVT30 EVM 30
KW	0,25	0,37	0,55	0,7	1,1	1,5	2,2
A* 230/400V	1,2/0,7	1,8/1,0	2,3/1,25	3,13/1,7	4,9/2,5	6,5/3,8	8,7/5,0

* Values could change according with type of used motor

60 Hz

Rpm 3450	EVT7 EVM8	EVT12 EVM12	EVT15 EVM15	EVT20 EVM20	EVT25 EVM25	EVT30 EVM 30
KW	0,37	0,55	0,7	1,1	1,5	2,2
A* 220/380V	2,6/1,5	2,9/1,7	3,9/2,2	6,0/3,5	8,0/4,6	10,2/6,0

* Values could change according with type of used motor

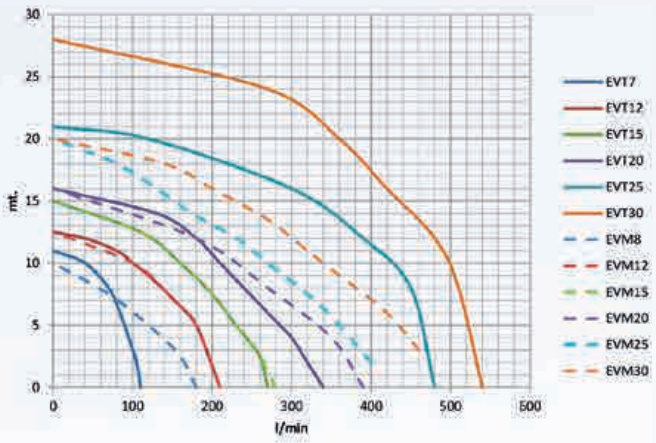

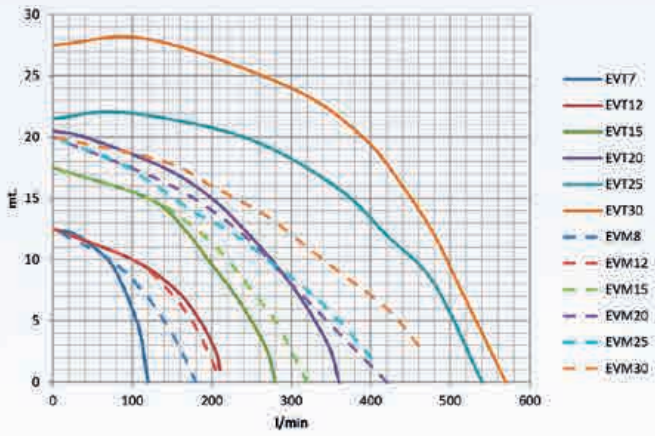

lafonte.eu

MIX 2.0 12

FILTRATION SYSTEMS

ADVANTAGES

- Ease of operation
- Long life
- Ability to Interchange with several different filtration systems in the same housing
- Ability to change between EVOLUTE magnetic drive and mechanical seal pump
- Three years warranty on filter housing

FEATURES

- Polypropylene machine solid monobloc filter housing
- Tilt lid with swing bolts closure system
- Magnetic drive or mechanical seal pump
- Solid Polypropylene base with discharge pipes and brackets on three side of the base
- Pre coat tank version
- Discs version, filter papers: D256/50 mm
- Filter housing improved distribution flow
- Tmax exercise 70°C with 3 Bar pressure

FILTRATION TYPE

Carbon Canister

Discs

Oilsorb Canister for degreasing process

High flow JUMBO pleated Cartridge

Various Cartridges for different applications

Series	Filter Chamber					Filter Element		Pump			OPTIONAL
	Discs Dxn° (m²/l)*	Cartridges n° x l"	JUMBO DxH" (m²)	Oilsorb (l)	Carbon (l)	Discs	Cartridges	Magnetic Drive	Mechanical Seal	Material	**A** = Suction Valve **M** = Discharge **B** = By pass pump/filter **C** = Carbon treatment valves group **G** = Pressure Guage **V** = Valve between pump and filter **T** = Prea coat tank **W** = Wheels **I** = Interlock sensor placed on splashproof lid ring
MIX	**12D1** 250x33 (1,5/7,2)	**12C1** 12x10	**12J1** 250x10 (4)			_ = carta **P**= Meraklon **T**= PTFE	_= DOE D63 **M**= DOE with spring closure system **P**=DOE D 70 **A**=SOE 222 **B**=SOE 226	**EVT7** **EVT12**	**EVM8** **EVM12**	_=PP **F**= PVDF	
	12D2 250x66 (3/14,4)	**12C2** 12x20	**12J2** 250x20 (8)	**12 O2** (20)	**12A2** (20)			**EVT12** **EVT15** **EVT20**	**EVM12** **EVM15** **EVM20**		
	12D3 250x100 (4,5/21,6)	**12C3** 12x30						**EVT15** **EVT20** **EVT25**	**EVM15** **EVM20**		
MIX	**12 O2**							**EVM15**			**GR**

* m² = Surface area / l = Sediment Volume

STANDARD VERSION

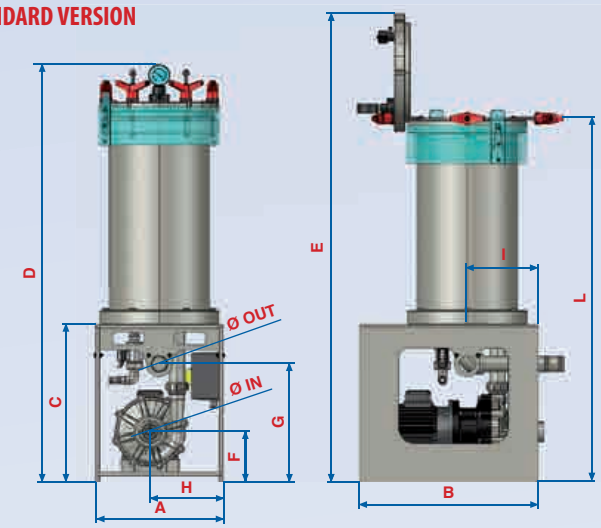

PRECOAT TANK VERSION

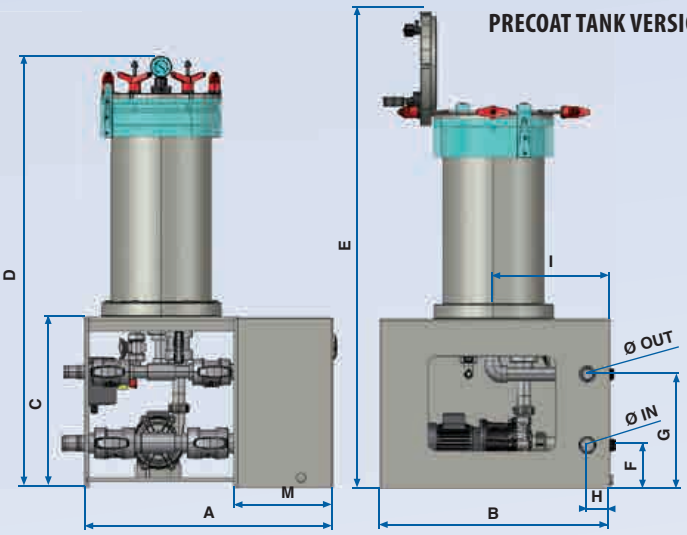

SERIES	HOUSING	PUMP	OVERALL DIMENSION												
			D in	D out	A	B	C	D	E	F	G	H	I	L	M
MIX	12D1 12C1 12P1	EVT7	32	32	395 720	500 560	350 420	895 965	1060 1130	117	290 300	158 65	207 270	785 805	300
		EVM8	40 50	40 50	395 770	560 680	450 500	995 1045	1290 1340	145	315 355	173 90	220 325	835 885	
		EVT12 EVM12	50	50											
	12D2 12C2 12P2 12O2 12A2	EVT12 EVM12 EVT15 EVM15	50	40	395 770	560 680	450 500	1250 1300	1545 1595	145	315 355	173 90	220 325	1090 1140	300
		EVT20 EVM20	50	50											
	12D3 12C3	EVT15 EVM15	50	40	395 770	560 680	450 500	1570 1620	1710 1770	145	375 365	173 70	220 325	1380 1430	300
		EVT20 EVM20	50	50											
		EVT25 EVT30	63	63	395 860	590 750	500 570	1620 1690	1760 1830	162	365	198 90		1430 1500	

50 Hz

Rpm 2800	EVT7	EVM8	EVT12 EVM12	EVT15 EVM15	EVT20 EVM20	EVT25 EVM25	EVT30 EVM 30
KW	0,25	0,37	0,55	0,7	1,1	1,5	2,2
A* 230/400V	1,2/0,7	1,8/1,0	2,3/1,25	3,13/1,7	4,9/2,5	6,5/3,8	8,7/5,0

* Values could change according with type of used motor

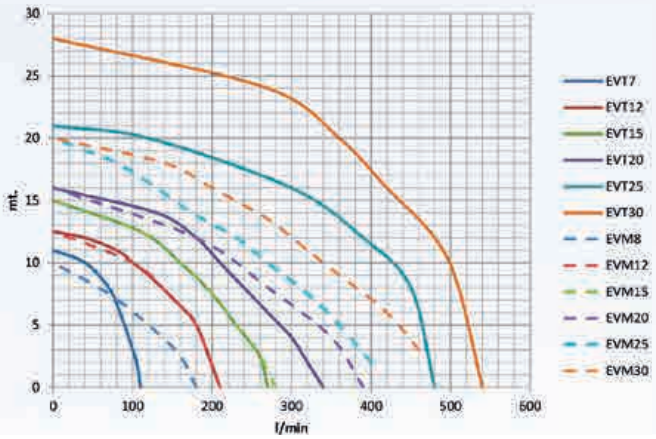

60 Hz

Rpm 3450	EVT7 EVM8	EVT12 EVM12	EVT15 EVM15	EVT20 EVM20	EVT25	EVT30
KW	0,37	0,55	0,7	1,1	1,5	2,2
A* 220/380V	2,6/1,5	2,9/1,7	3,9/2,2	6,0/3,5	8,0/4,6	10,2/6,0

* Values could change according with type of used motor

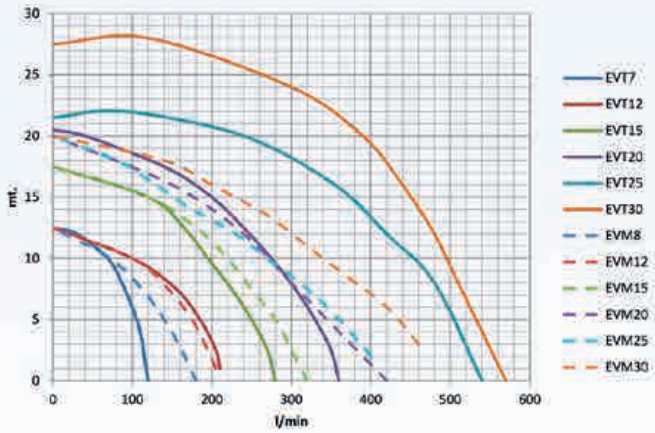

lafonte.eu

MIX 2.0 15

FILTRATION SYSTEMS

ADVANTAGES

- Ease of operation
- Long life
- Ability to Interchange with several different filtration systems in the same housing
- Ability to change between EVOLUTE magnetic drive and mechanical seal pump
- Three years warranty on filter housing

FEATURES

- Polypropylene machine solid monobloc filter housing
- Tilt lid with swing bolts closure system
- Magnetic drive or mechanical seal pump
- Solid Polypropylene base with discharge pipes and brackets on three side of the base
- Pre coat tank version
- Discs version, filter papers: D295/50 mm
- Filter housing improved distribution flow
- Tmax exercise 70°C with 3 Bar pressure

FILTRATION TYPE

Carbon Canister

Discs

Oilsorb Canister for degreasing process

High flow JUMBO pleated Cartridge

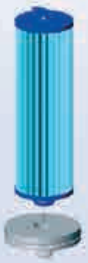

Various Cartridges for different applications

Series	Filter Chamber					Filter Element		Pump			OPTIONAL
	Discs Dxn° (m²/l)*	Cartridges n° x l"	JUMBO DxH" (m²)	Oilsorb (l)	Carbon (l)	Discs	Cartridges	Magnetic Drive	Mechanical Seal	Material	
MIX	**15D1** 290x33 (2,2/9,5)	**15C1** 15x10				_ = carta **P**= Meraklon **T**= PTFE	_= DOE D63 **M**= DOE with spring closure system **P**=DOE D 70 **A**=SOE 222 **B**=SOE 226	**EVT7** **EVT12** **EVT15**	**EVM8** **EVM12** **EVT15**	_=PP **F**= PVDF	**A** = Suction Valve **M** = Discharge **B** = By pass pump/filter **C** = Carbon treatment valves group **G** = Pressure Guage **V** = Valve between pump and filter **T** = Prea coat tank **W** = Wheels **I** = Interlock sensor placed on splashproof lid ring
	15D2 290x66 (4,4/19)	**15C2** 15x20		**15O3** (30)	**15A3** (30)			**EVT15** **EVT20** **EVT25**	**EVM15** **EVM20**		
	15D3 290x100 (6,6/28,5)	**15C3** 15x30						**EVT20** **EVT25** **EVT30**	**EVM20**		
MIX	**15D2**							**EVT25**		**M**	**AMGR**

* m² = Surface area / l = Sediment Volume

STANDARD VERSION

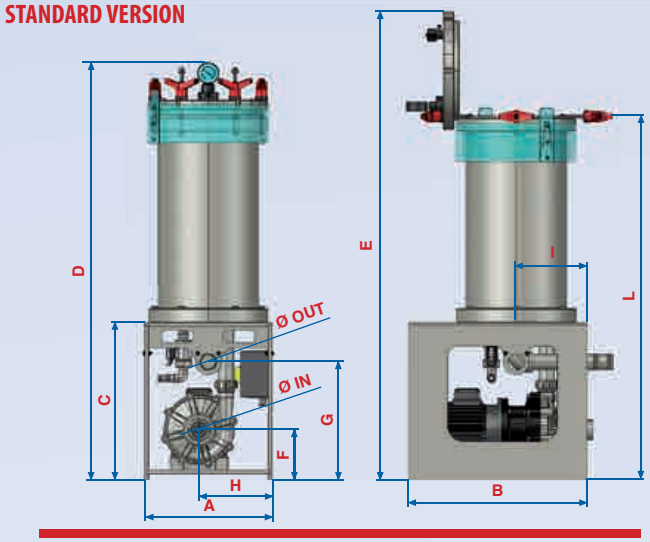

PRECOAT TANK VERSION

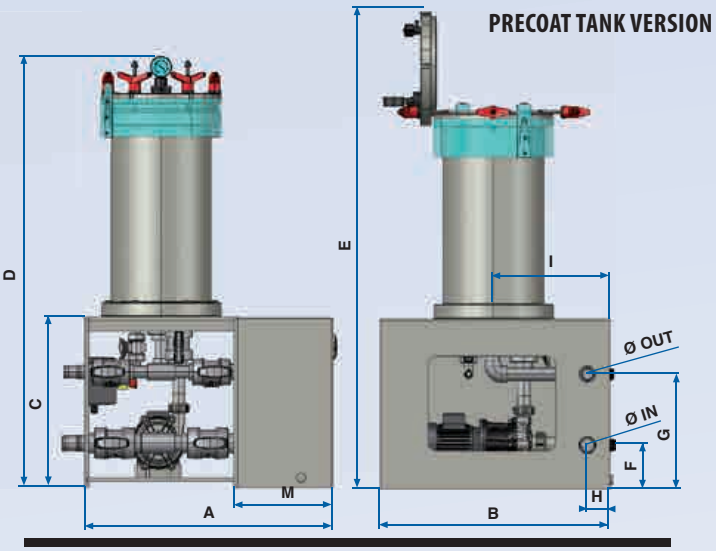

SERIES	HOUSING	PUMP	OVERALL DIMENSION													
			D in	D out	A	B	C	D	E	F	G	H	I	L	M
MIX	15D1 15C1	EVT7	32	32	450 780	560 595	350 420	920 990	1125 1195	117	290 300	170 65	240 285	795 815	330
		EVM8 EVT12 EVM12 EVT15 EVM15	50	40	450 810	590 720	450 500	1120 1170	1225 1275	145	320 355	185 90	250 337,5	465 915	
	15D2 15C2 15O2 15A2	EVT15 EVM15	50	40	450 810	590 720	450 500	1375 1425	1480 1530	145	320 355	185 90	250 337,5	1120 1170	330
		EVT20 EVM20		50											
		EVT25	63	63	450 890	650 780	500 660	1375 1535	1480 1640	162 247	360 450	204 100	275 387	1170 1330	
	15D3 15C3	EVT20 EVM20	50	50	450 810	590 720	450 500	1635 1685	1740 1790	145	320 355	185 90	250 337,5	1430 1480	330
		EVT25 EVT30	63	63	450 890	650 780	500 660	1685 1795	1790 2050	162 247	360 450	204 100	275 387	1480 1640	

50 Hz

Rpm 2800	EVT7	EVM8	EVT12 EVM12	EVT15 EVM15	EVT20 EVM20	EVT25 EVM25	EVT30 EVM 30
KW	0,25	0,37	0,55	0,7	1,1	1,5	2,2
A* 230/400V	1,2/0,7	1,8/1,0	2,3/1,25	3,13/1,7	4,9/2,5	6,5/3,8	8,7/5,0

* Values could change according with type of used motor

60 Hz

Rpm 3450	EVT7 EVM8	EVT12 EVM12	EVT15 EVM15	EVT20 EVM20	EVT25 EVM25	EVT30 EVM 30
KW	0,37	0,55	0,7	1,1	1,5	2,2
A* 220/380V	2,6/1,5	2,9/1,7	3,9/2,2	6,0/3,5	8,0/4,6	10,2/6,0

* Values could change according with type of used motor

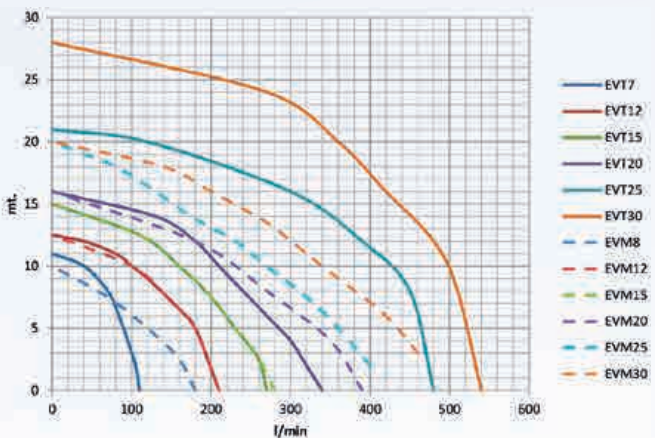

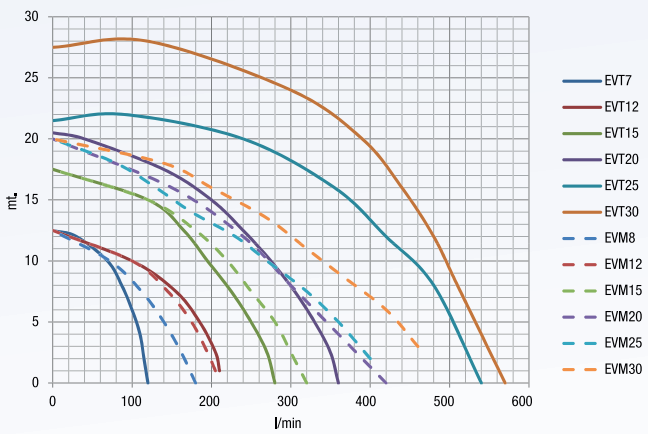

lafonte.eu

SLIM 2.0 3

FILTRATION SYSTEMS

ADVANTAGES

- Ease of operation
- Long life
- Ability to Interchange with several different filtration systems in the same housing
- Ability to change between EVOLUTE magnetic drive and mechanical seal pump
- Three years warranty on filter housing

FEATURES

- Polypropylene machine solid monobloc filter housing
- Tilt lid with swing bolts closure system
- Magnetic drive or mechanical seal pump
- Solid Polypropylene base with discharge pipes and brackets on three side of the base
- Discs version, filter papers: D150/32 mm
- Filter housing improved distribution flow
- Tmax exercise 70°C with 3 Bar pressure

FILTRATION TYPE

Carbon Canister

Discs

Oilsorb Canister for degreasing process

High flow JUMBO pleated Cartridge

Various Cartridges for different applications

Series	Filter Chamber					Filter Element		Pump			OPTIONAL
	Discs D mm x n° (m²/l)*	Cartridges n° x l"	JUMBO D mm x H" (m²)	Oilsorb (l)	Carbon (l)	Discs	Cartridges	Magnetic Drive	Mechanical Seal	Material	**A** = Suction Valve **M** = Discharge **G** = Pressure Guage **W** = Wheels **I** = Interlock sensor placed on splashproof lid ring
SLM SLC	**3D1** 150x32 (0,55/2)	**3C1** 3x10	**3J1** 150x10 (1,5)			_ = carta **P**= Meraklon **T**= PTFE	_ = DOE D63 **M**= DOE with spring closure system **P**=DOE D 70 **A**=SOE 222 **B**=SOE 226	**EVT7**		_=PP **F**= PVDF	
	3D2 150x62 (1,1/4)	**3C2** 3x20	**3J2** 150x20 (3,0)	**3O2** (5)	**3A2** (5)			**EVT7** **EVT12**	**EVM8** **EVM12**		
		3C3 3x30	**3J3** 150x30 (4,5)					**EVT7** **EVT12**	**EVM8** **EVM12**		
SLM/SLC	3C2							EVM12		F	GR

* m² = Surface area / l = Sediment Volume

SERIES SLM

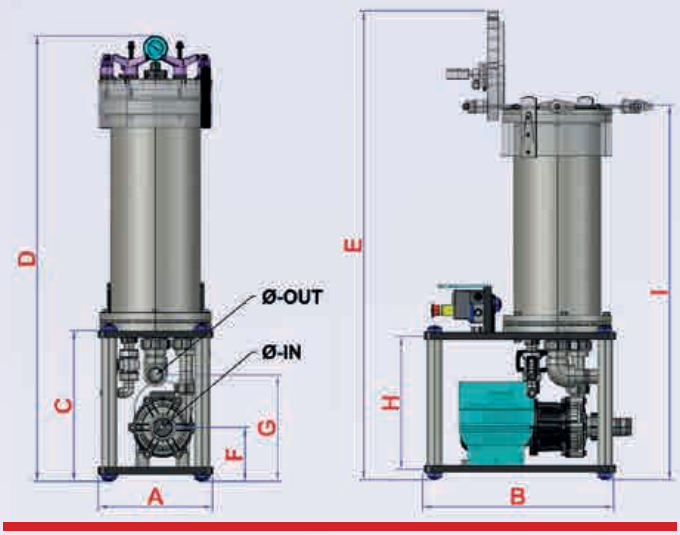

SERIES SLC

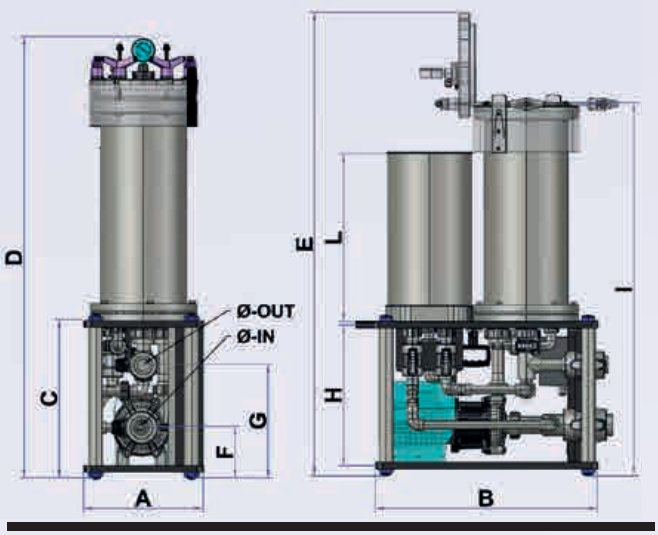

SERIES	HOUSING	PUMP	OVERALL DIMENSION											
			D in	D out	A	B	C	D	E	F	G	H	I	L
SLM SLC	3D1 3C1 3J1	EVT7	32	32	295 315	380 660	390	955	955	122	292	350	783	300
	3D2 3C2 3J2 3O2 3A2	EVT7	32	32	295 315	380 660	390	1210	1250	122	292	350	1038	500
		EVM8	40	40	295 350	460 690	420 490	1240 1310	1280 1350	150	322 392	380 450	1063 1138	
		EVT12 EVM12 EVT15 EVM15	50	40										
	3C3 3J3	EVM8	40	40	295 350	460 690	420 490	1490 1560	1530 1600	150	322 392	380 450	1313 1388	750
		EVT12 EVM12 EVT15 EVM15	50	40										
		EVT20 EVM20												

50 Hz

Rpm 2800	EVT7	EVM8	EVT12 EVM12	EVT15 EVM15	EVT20 EVM20
KW	0,25	0,37	0,55	0,7	1,1
A* 230/400V	1,2/0,7	1,8/1,0	2,3/1,25	3,13/1,7	4,9/2,5

* Values could change according with type of used motor

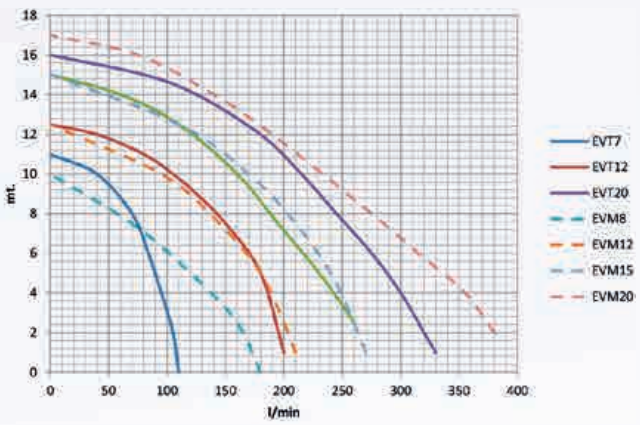

60 Hz

Rpm 3450	EVT7 EVM8	EVT12 EVM12	EVT15 EVM15	EVT20 EVM20
KW	0,37	0,55	0,7	1,1
A* 220/380V	2,6/1,5	2,9/1,7	3,9/2,2	6,0/3,5

* Values could change according with type of used motor

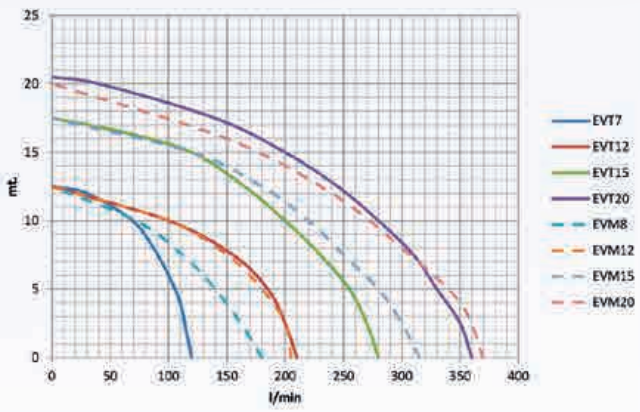

lafonte.eu

SLIM 2.0 7

FILTRATION SYSTEMS

ADVANTAGES

- Ease of operation
- Long life
- Ability to Interchange with several different filtration systems in the same housing
- Ability to change between EVOLUTE magnetic drive and mechanical seal pump
- Three years warranty on filter housing

FEATURES

- Polypropylene machine solid monobloc filter housing
- Tilt lid with swing bolts closure system
- Magnetic drive or mechanical seal pump
- Solid Polypropylene base with discharge pipes and brackets on three side of the base
- Pre coat tank version
- Discs version, filter papers: D205/32 mm
- Filter housing improved distribution flow
- Tmax exercise 70°C with 3 Bar pressure

FILTRATION TYPE

Carbon Canister

Discs

Oilsorb Canister for degreasing process

High flow JUMBO pleated Cartridge

Various Cartridges for different applications

Series	Filter Chamber					Filter Element		Pump			OPTIONALS
	Discs D mm x n° (m²/l)*	Cartridges n° x l"	JUMBO D mm x H" (m²)	Oilsorb (l)	Carbon (l)	Discs	Cartridges	Magnetic Drive	Mechanical Seal	Material	
SLM SLC	**7D1** 200x35 (1/4,3)	**7C1** 7x10	**7J1** 200x10 (2,5)			_ = carta **P**= Meraklon **T**= PTFE	_= DOE D63 **M**= DOE with spring closure system **P**=DOE D 70 **A**=SOE 222 **B**=SOE 226	**EVT7**	**EVM8**	_=PP **F**= PVDF	**A** = Suction Valve **M** = Discharge **G** = Pressure Guage **W** = Wheels **I** = Interlock sensor placed on splashproof lid ring
	7D2 200x66 (2/8,6)	**7C2** 7x20	**7J2** 200x20 (5)	**7O2** (15)	**7A2** (15)			**EVT7** **EVT12** **EVT15**	**EVM8** **EVM12** **EVM15**		
		7C3 7x30						**EVT 12** **EVT 15** **EVT20**	**EVM12** **EVM15** **EVM20**		
SLM/SLC	**7D1**					**P**		**EVT7**			**GTR**

* m² = Surface area / l = Sediment Volume

SERIES SLM

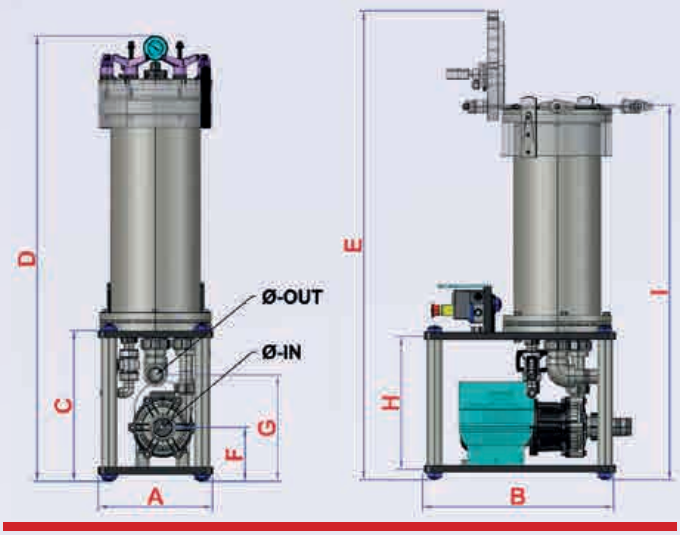

SERIE SLC

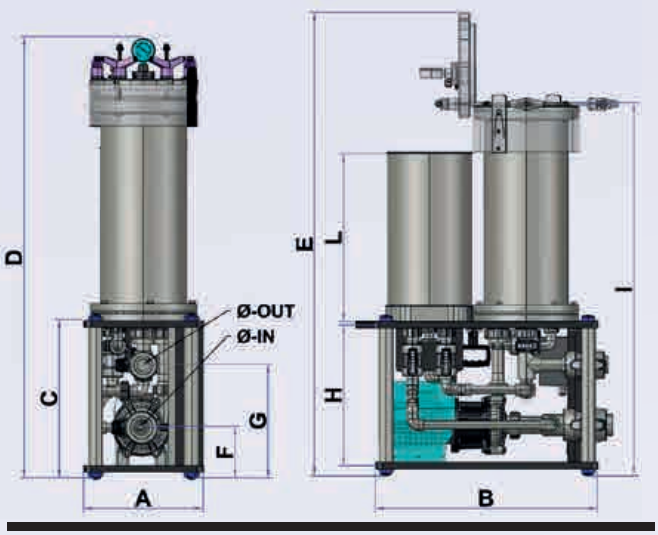

SERIES	HOUSING	PUMP	OVERALL DIMENSION											
			D in	D out	A	B	C	D	E	F	G	H	I	L
SLM SLC	7D1 7C1 7J1	EVT7	32	32	320 315	450 660	390	955	1055	122	292 275	350	783	300
		EVM8	40	40	320 350	550 725	420 460	985 1025	1085 1125	150	295 330	380 420	813 853	
	7D2 7C2 7J2 7O2 7A2	EVT7	32	32	320 315	450 660	390	1210	1310	122	292 275	350	1038	500
		EVM8	40	40	320 350	550 690	420 460	1240 1280	1340 1380	150	295 330	380 420	1068 1108	
		EVT12 EVM12 EVT15 EVM15	50	40										
		EVT20 EVM20	50	50										
	7C3	EVT12 EVM12 EVT15 EVM15	50	40	320 350	550 690	420 460	1490 1530	1590 1630	150	295 330	380 420	1318 1358	750
		EVT20 EVM20	50	50										
		EVT25 EVT30	63	50	320	550	460	1530	1630	167	335	420	1358	

50 Hz

Rpm 2800	EVT7	EVM8	EVT12 EVM12	EVT15 EVM15	EVT20 EVM20
KW	0,25	0,37	0,55	0,7	1,1
A* 230/400V	1,2/0,7	1,8/1,0	2,3/1,25	3,13/1,7	4,9/2,5

* Values could change according with type of used motor

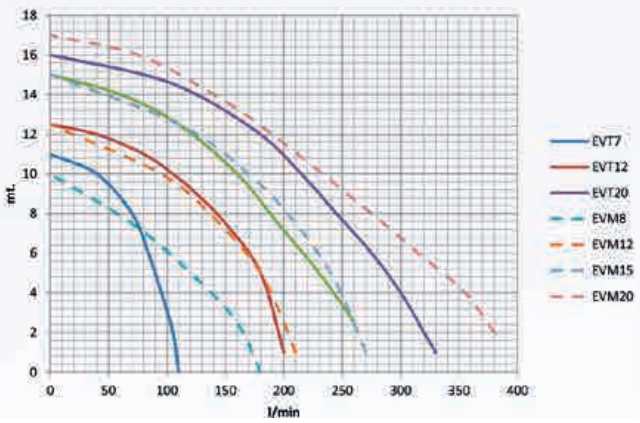

60 Hz

Rpm 3450	EVT7 EVM8	EVT12 EVM12	EVT15 EVM15	EVT20 EVM20
KW	0,37	0,55	0,7	1,1
A* 220/380V	2,6/1,5	2,9/1,7	3,9/2,2	6,0/3,5

* Values could change according with type of used motor

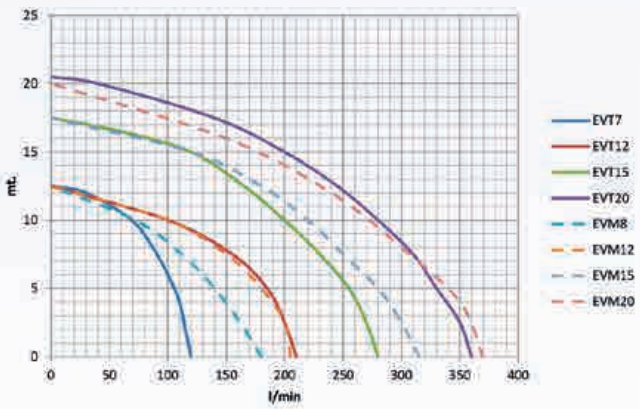

lafonte.eu

TOP

FILTERING UNIT

ADVANATAGES

- Rugged construction
- Interchangeability filter inserts
- Large surface area and volume of sediment
- Interchangeability magnetic pump/mechanical seal pump (EVOLUTE)
- Excellent resistance at alkaline and acid chemicals
- Filter housing three year warranty

FEATURES

- Filter flow rate 15-50 m^3/h
- Tmax exercise 70°c with 3 bar presure
- PP solid monoblocc filter housing
- Large choice of filtration systems
- Versions: valve between pump and filter housing, precoat tank (100 l) with PP valves group
- Filter papers Ø 350/60 mm

FILTER ELEMENTS

The great versatility of the filter unit offers to the operator the possibility to choose between different kinds of filtration or purification with the same unit.

CARBON CANISTER

FILTER PACK WITH ABSOLUTE RATE WH BAG PLEATED ELEMENTS OR BAGS

FILTER PACK WITH OILSORB

FILTER PACK WITH HIGH FLOW WA-SHABLE JUMBO CARTIDGES

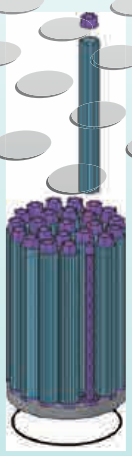

FILTER PACK WITH CARTRIDGES

FILTER PACK WITH LOW PROFILE DISCS

FILTER PACK WITH HIGH PROFILE DISCS

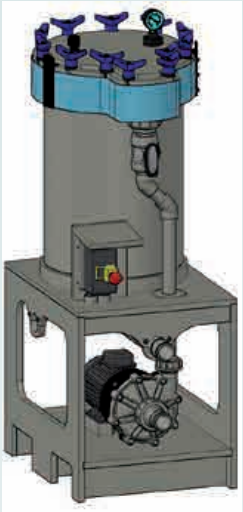

VERSION STANDARD

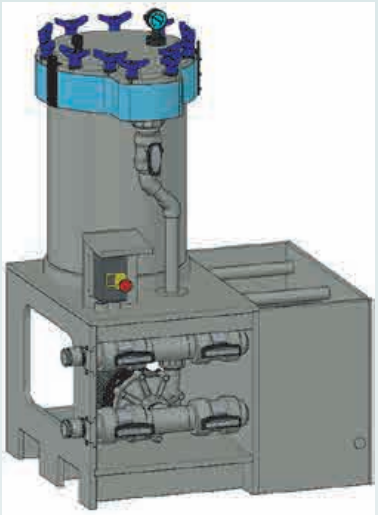

VERSION "PRECOAT TANK"

Mod	FILTER HOUSING							FILTER ELEMENT					PUMP			VERSION	OPTIONAL
	Discs Dxn° (m^2/l)*	Cartrid-ges n° x l"	JUMBO (m^2)	WH Absolute rate Pleated bag (m2)	Bags (m2)	Oilsorb (l)	Carbon (l)	Discs D350/60 mm	Cartrid-ges	JUMBO	WH	Bags	Mag drive	Mecha-nical seal	Mat.	Type	Type
TOP	24D2 (5/25)	24C2 (24X20)	24P2 (12)	24W2 (12)	24B2 (3)	24O2 (45)	24A2 (24)	_= paper **P**= Meraklon **T**= PTFE	_= DOE D63 **P**= DOE D 70 **A**= SOE 222 **B**= SOE 226	n° 4 cartridges JBP2A D150 mm		n° 3 bags SIZE 1 D 178x410 mm	EVT15 EVT20 EVT25 EVT30	EVM20 O3A2 O3B1 O3B2	_=PP **F**= PVDF	_= valve between pump and filter **T**=pre coat tank (V=100l)	**B** = By pass pump filter **R**= splashproof lid ring **I**= interlock lis sensor **P**= filter pack replacement system with electric hoist **X**= stainless steel frame with dropping tank
	24D2H (5/28)																
	24D3 (7,5/37)	24C3 (24X30)	24P3 (18)	24W3 (18)	24B3 (6)	24O3 (68)	24A3 (36)			n° 4 cartridges JBP3A D150 mm	n° 3 WH pleated ele-ment 30"	n° 3 bags SIZE 1 D 178x813 mm	EVT20 EVT25 EVT30 MPP831	EVM20 O3A2 O3B1 O3B2 O4B3			
	24D3H (7,5/40)																
TOP	24D2H							P					EVT25		F	T	R

* m^2 = surface area / l = volume of sediment

MAGNETIC PUMP 50Hz Rpm2800

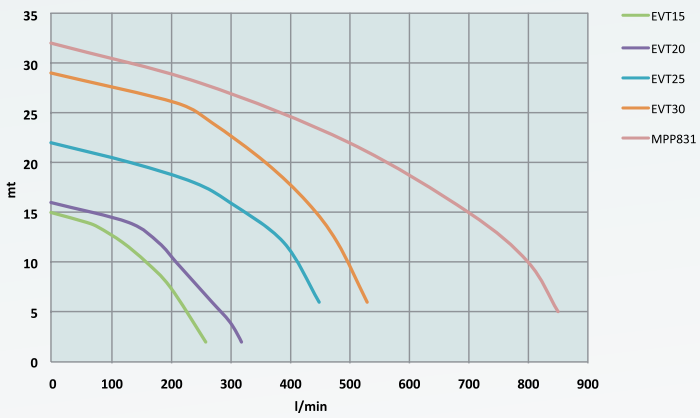

MECHANICAL SEAL 50 Hz Rpm 2800

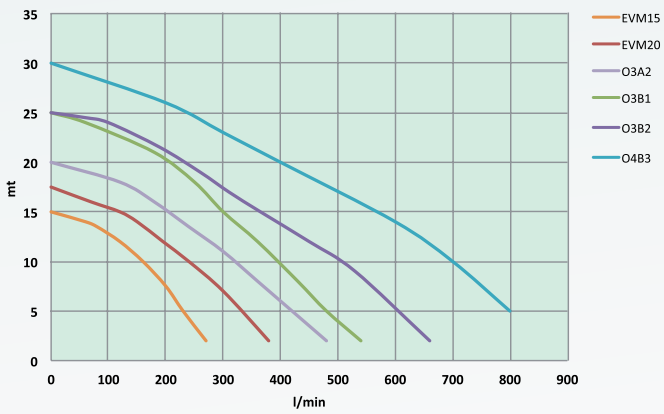

	EVT15 EVM15	EVT20 EVM20	EVT25	EVT30 O3A2	O3B1	MPP831	O4B3
KW	0,7	1,1	1,5	2,2	3	4	5,5
A* 220/380V	3,13/1,7	4,9/2,5	6,5/3,8	8,7/5,0	7,2/5,9	13,2/7,6	20/11,5
A* 400/690V							11,5/6,9

* data can change accordind with motor type

lafonte.eu

BIG 2.0

FILTERING UNIT

FEAUTURES

- Filter flow rate 2 - 50 m^3/h
- Pmax exercise 3 Bar at 70°C
- PP solid monoblocc filter housing
- Large choice of filtration systems
- Versions:
  _= Standard double suction and discharge valve
  K=Inlet-Outlet and valve between pump and chamber KIT
  T= precoat tank with valves group
- Filter papers Φ 460/100 mm

ADVANTAGES

- More robust solid monoblocc filter chamber
- Assisted lid opening/closure system
- Improved distribution flow
- Four 90° lid opening positions
- Choice of 9 interchangeable filter inserts
- Large surface aerea and volume of sediment capability
- Interchangeability magnetic pump/mechanical seal pump (EVOLUTE series)
- Excellent resistance at alkaline and acid chemicals
- Filter housing 3 year warranty

FILTER ELEMENTS

The great versatility of the filter unit offers to the operator the possibility to choose between different kinds of filtration or purification with the same unit.

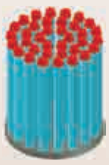

Cartridges: PP cap cartridges clamping system Filter insert

NEW

Cartridges: PP pressing ring clamping system Filter insert

Hi Flow filter inserts with washable JUMBO and CH high efficiency cartridges

Carbon canister filter insert

Hi and Low profile discs filter insert with double discs closure system

NEW

Hi and Low profile discs filter insert

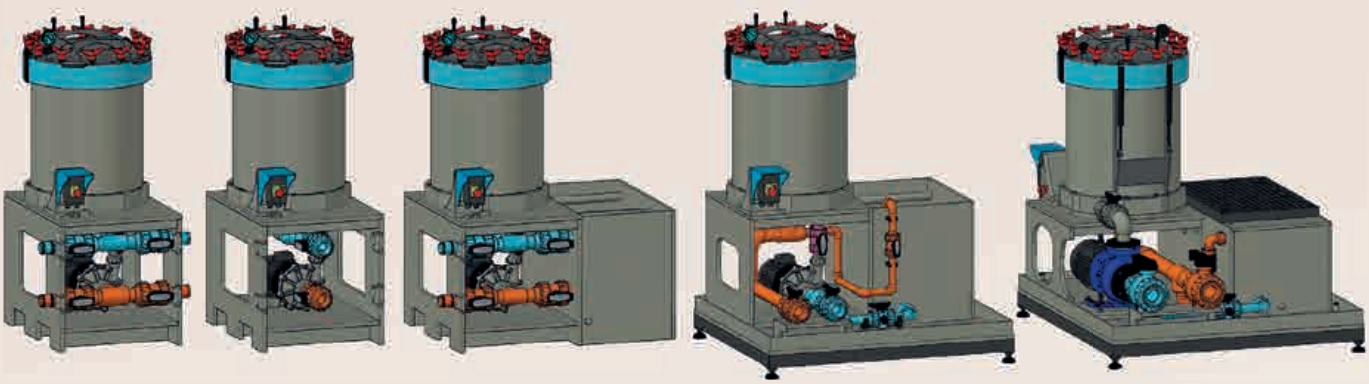

VERSION BIG "STANDARD" | VERSION BIG "K" | VERSION BIG "T" | VERSION BIG "TX" | VERSION BIG S "TX"

Mod.	FILTER HOUSING							PUMP			VERSION	OPTIONALS
	FILTER INSERT				FILTER ELEMENT							
	Discs	Cartridges	High Flow	Carbon	Discs	Cartridges	High Flow	Magnetic drive	Mechanical seal	Material	Type	Type
	mod. (m^2/l)*	n°xl	(m^2)	(l)								
BIG BIG-S = chamber side inlet	36D2 36D2T** (6/40)	36C2 (36x20)	36J2 (21)	36A2 (60)	_ = paper P= Meraklon T= PTFE	_= DOE D63 A=SOE 222 B=SOE 226	n°7 cartridges WASHABLE JUMBO JBP2A D150 mm	MPP302 MPP500 MPP501 EVT20 EVT25 EVT 30	EVM20 EVM25 EVM30 EVM35 O3A2 O3B1 O3B2	_=PP F= PVDF	_=double IN/OUT valves group	B=By pass pump filter I=interlock lis sensor P= filter pack replacement system with electric hoist X=Stainless Steel frame with PP dropping tank
	36D2H* 36D2HT** (6x45)		36W2 (18)				n°14 cartridges CH x20" Absolute Rate				K=Inlet-Outlet and valve between pump and chamber KIT	
	36D3 36D3T** (9/60)	36C3 (36x30)	36J3 (31,5)	36A3 (90)			n°7 cartridges WASHABLE JUMBO JBP2A D150 mm	MPP302 MPP500 MPP501 MPP831 MPP951 EVT20 EVT25 EVT 30	EVM20 EVM25 EVM30 EVM35 O3A2 O3B1 O3B2 O4B3 O4B4		T=precoat tank (V=180l) with valves group	
	36D3H* 36D3HT** (9x65)		36W3 (27)				n°7 cartridges CH x30" Absolute Rate				C***= round precoat tank with valves group	
BIG	36D2H				P			EVT25			T	P

*H - High profile disc for Zinc processes - ** Filter insert with titanium double closure system - *** always combined at SS frame with dropping tank (Option X)

MAGNETIC DRIVE

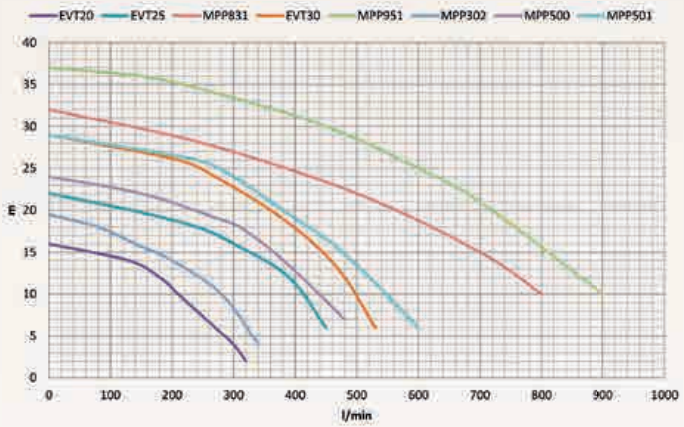

MECHANICAL SEAL

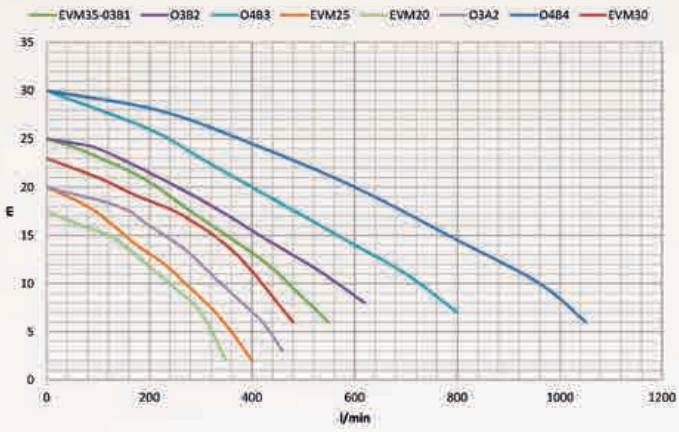

50 HZ	EVT20	EVT25	EVT30	MPP302	MPP500	MPP501	MPP831	MPP951	
KW	1,1	1,5	2,2	1,5	2,2	3	4	5,5	
A* 230/400V	4,9/2,5	6,5/3,8	8,7/5,0	6,5/3,8	8,7/5,0	7,2/5,9	13,2/7,6	20/11,5	
A* 400/690V								11/6,90	14,1/8,1
KW	1,1	1,5	2,2	1,5	2,2	3	4	5,5	
50 HZ	EVM20	EVM25	EVM30	EVM35	O3A2	O3B1	O3B2	O4B3	O4B4

* data can change accordind with motor type

lafonte.eu

BIG 2.0 D

FILTERING UNIT

ADVANTAGES

- More robust solid monoblocc filter chamber
- Assistedlid opening/closuresystem
- Improveddistributionflow
- Four 90° lid opening positions
- Choice of 9 interchangeablefilterinserts
- Large surface aerea and volume of sediment capability
- Interchangeability magnetic pump/mechanical seal pump (EVOLUTE series)
- Excellent resistance at alkaline and acid chemicals
- Filter housing 3 year warranty

FEAUTURES

- Filter flow rate 30 - 100 m3/h
- Pmax exercise 3 Bar at 70°C
- PP solidmonobloccfilterhousing
- Large choice od filtration systems:
- Versions:
  TX= Precoat tan, PP valves group and SS frame with PP dropping tank
  CX= Round precoat tan, PP valves group and SS frame with PP dropping tank
- FilterpapersΦ 460/100 mm

FILTER ELEMENTS

The great versatility of the filter unit offers to the operator the possibility to choose between different kinds of filtration or purification with the same unit.

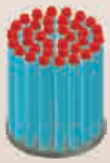

Cartridges: PP cap cartridges clamping system Filter insert

NEW

Cartridges: PP pressing ring clamping system Filter insert

Hi Flow filter inserts with washable JUMBO and CH high efficiency cartridges

Carbon canister filter insert

NEW

Hi and Low profile discs filter insert with double discs closure system

Hi and Low profile discs filter insert

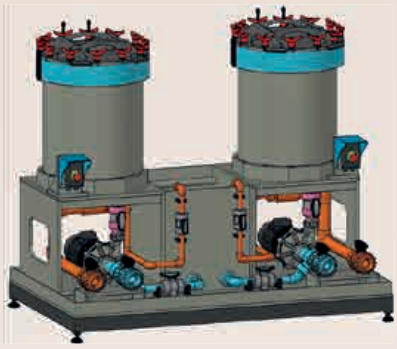

VERSION BIG-D TX

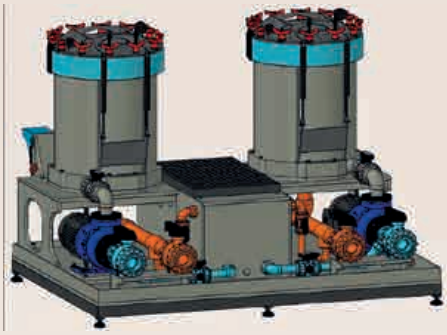

VERSION BIG-DS TX

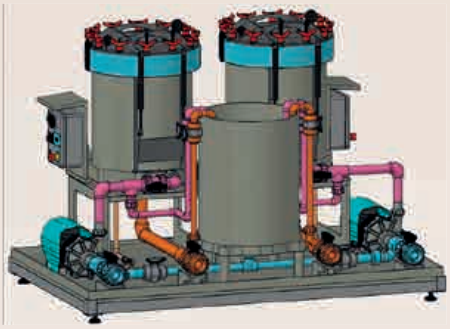

VERSION BIG-DS CX

Mod.	FILTER HOUSING (n°2)							PUMPS(n°2)			VERSION	OPTIONALS
	FILTER INSERT				FILTER ELEMENT							
	Discs Dxn° mod. (m²/l)*	Cartridges n°xl	High Flow (m²)	Carbon (l)	Discs	Cartridges	High Flow	Magnetic drive	Mechanical seal	Materia	Type	Type
BIG-D BIG-DS	36D2 36D2T** (12/80)	36C2 (62x20)	36J2 (42)	36A2 (120)	_ = paper P= Meraklon T= PTFE	_= DOE D63 P=DOE D 70 A=SOE 222 B=SOE 226	n°14 cartridges WASHABLE JUMBO JBP2A D150 mm	MPP302 MPP500 MPP501 EVT20 EVT25 EVT 30	EVM20 03A2 03B1 03B2	_=PP F= PVDF	TX=Precoat tan, PP valves group and SS frame with PP dropping tank CX= Round precoat tan, PP valves group and SS frame with PP dropping tank	B=By pass pump filter R=splashproof lid ring I=interlock lis sensor P= filter pack replacement system with electric hoist
	36D2H* 36D2HT** (12x90)		36W2 (36)				n°14 cartridges CH x 20" Absolute Rate					
	36D3 36D3T** (18/120)	36C3 (62x30)	36J3 (63)	36A3 (180)			n°14 cartridges WASHABLE JUMBO JBP3A D150 mm	MPP302 MPP500 MPP501 MPP831 MPP951 EVT20 EVT25 EVT 30	EVM20 03A2 03B1 03B2 04B3 04B4			
	36D3H* 36D3HT** (18x130)		36W3 (54)				n°14 cartridges CH x 30" Absolute Rate					
BIG-D	36D2H				P			EVT25			T	P

*H - High profile disc for Zinc processes - ** Filter insert with titanium double closure system - *** always combined at SS frame with dropping tank (Option X)

MAGNETIC DRIVE

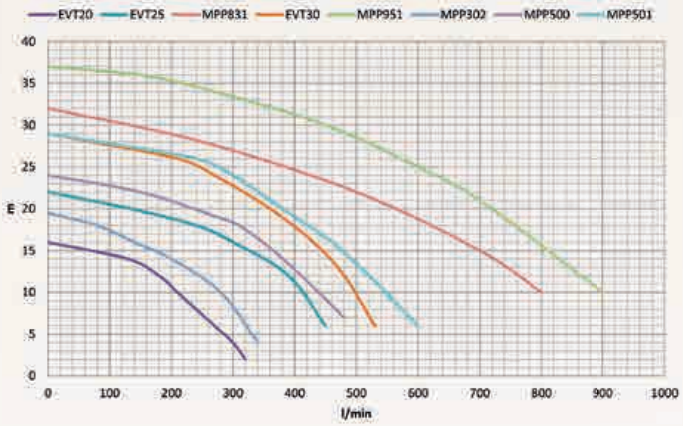

MECHANICAL SEAL

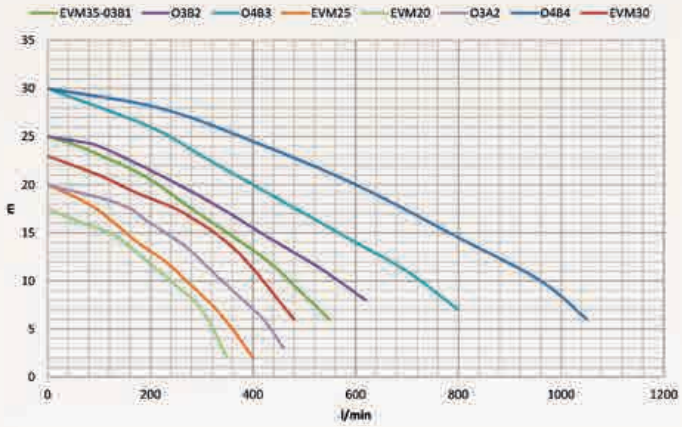

50 HZ	EVT20	EVT25	EVT30	MPP302	MPP500	MPP501	MPP831	MPP951	
KW	1,1	1,5	2,2	1,5	2,2	3	4	5,5	
A* 230/400V	4,9/2,5	6,5/3,8	8,7/5,0	6,5/3,8	8,7/5,0	7,2/5,9	13,2/7,6	20/11,5	
A* 400/690V								11/6,90	14,1/8,1
KW	1,1	1,5	2,2	1,5	2,2	3	4	5,5	
50 HZ	EVM20	EVM25	EVM30	EVM35	03A2	03B1	03B2	04B3	04B4

* data can change accordind with motor type

lafonte.eu

BFP D

SISTEMI DI FILTRAZIONE

FEATURES

- Filter Housing monoblock
- Standard version: PP (Tmax 75°C), optional PVDF (Tmax 95°C)
- Version H: PP (Tmax 90°C)
- Quick Lid Closure System, with swing bolts
- Tiltable Lid
- Models to fit bag filter SIZE 1-2-4

ADVANTAGES

- Robust construction
- Chemically Inert
- Interchangeble Filter Bag / HigFlow WH Cartridge
- Interchangeble Magnetic Pump / Mechnical Seal
- 3 years Warranty for the Filter Chamber

Mod.	Filter chamber Standard version		Bag		Pump			OPTIONALS
	Material	Size	type	Dimension Dx H mm	Magnetic pump	Mechanical seal pump	material	
BFP	_=PP	1040	SIZE 4	100x400	MPC042 MPP051 MPP101 EVT7 EVT12 EVT20 SDM 2X8 SDM 2X10	EVM8 EVM12 EVM 15	V= PVDF _= PP	A= Suction valve M= DIscharge valve B=By pass pump-filter G= Pressure gauge V= valve between pump and fitler W= wheels R= splahproof lid ring I= intelock lid sensor
		1840	SIZE 1	180x410				
	V= PVDF	1880	SIZE 2	180x800				
Mod.	Filter chamber H version		Bag		Pump			
	Material	Size	type	Dimension Dx H mm	Magnetic pump	Mechanical seal pump	material	
BFP	_=PP	1840H	SIZE 4	100x400	MPC042 MPP051 MPP101 EVT7 EVT12 EVT20 SDM 2X8 SDM 2X10	EVM8 EVM12 EVM 15	V= PVDF _= PP	
			SIZE 1	180x410				
		1880H	SIZE 2	180x800				
BFP		1880H			EVM15			GR

Serie	Chamber	Pump	DIMENSIONS									
			D in	D out	A	B	C	D	E	F	G	I
BFP	1040V	MPC042	32	32	300	400	400	970	1100	105	303	815
		MPP051										
		MPP101								112		
		EVT7										
		EVT12	50	32	340	460				144		
		EVT15										
		EVM8	40	32								
		EVM12	50	32								
		EVM15										
	1840V	MPC042	32	32	300	400	400	1100	1250	105	303	930
		MPP051										
		MPP101								112		
		EVT7										
		EVT12	50	40	340	460				144		
		EVT15										
		EVT20										
		EVM8	40	32								
		EVM12	50	40								
		EVM15										
		SDM2x8	32	32	400	560	460	1160	1310	126	315	990
		SDM2,5x10	50	40						144		
	1880V	MPC042	32	32	300	400	400	1430	1580	105	303	1260
		MPP051										
		MPP101								112		
		EVT7										
		EVT12	50	40	340	460				144		
		EVT15										
		EVT20										
		EVM8	40	32								
		EVM12	50	40								
		EVM15										
		SDM2x8	32	32	400	560	460	1490	1640	126	315	1320
		SDM2,5x10	50	40						144		
BFP	1840H	MPC042	32	32	320	420	400	1150	1305	105	303	930
		MPP051										
		MPP101								112		
		EVT7										
		EVT12	50	40	400	560	460	1210	1365	144	315	990
		EVT15										
		EVT20										
		EVM8	40	32								
		EVM12	50	40								
		EVM15										
		SDM2x8	32	32						126		
		SDM2,5x10	50	40						144		
	1880H	MPC042	32	32	320	420	400	1480	1635	105	303	1260
		MPP051										
		MPP101								112		
		EVT7										
		EVT12	50	40	400	560	460	1540	1695	144	315	1320
		EVT15										
		EVT20										
		EVM8	40	32								
		EVM12	50	40								
		EVM15										
		SDM2x8	32	32						126		
		SDM2,5x10	50	40						144		

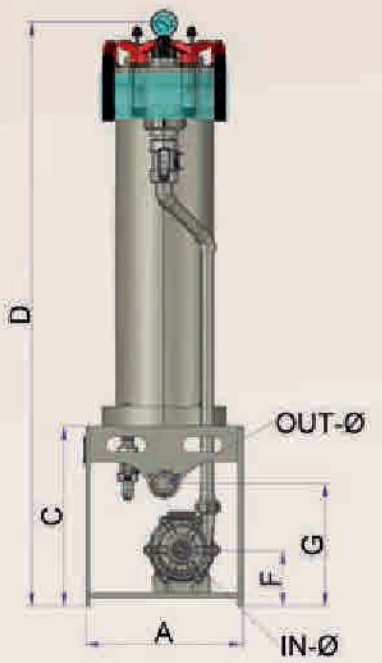

LAFONTE.EU srl may modify data any time, without notice, in order to get product enhancement.

lafonte.eu

CFB TOP

BAG FILTER HOUSING

ADVANTAGES

- Rugged construction
- Inert at chemicals
- Interchangeability bag filters and cartridges High Flow WH
- 3 years warranty

FEATURES

- PP solid monoblocc body
- PP and PVDF versions
- Swing bolts closure system with swing bolts
- Til lid
- Lid inlet
- Union connection
- SIZE 1-2-4 bags availability
- Tmax exercise PP 85°C-PVDF 100°C
- Pmax exercise: 6 Bar @ 20°C

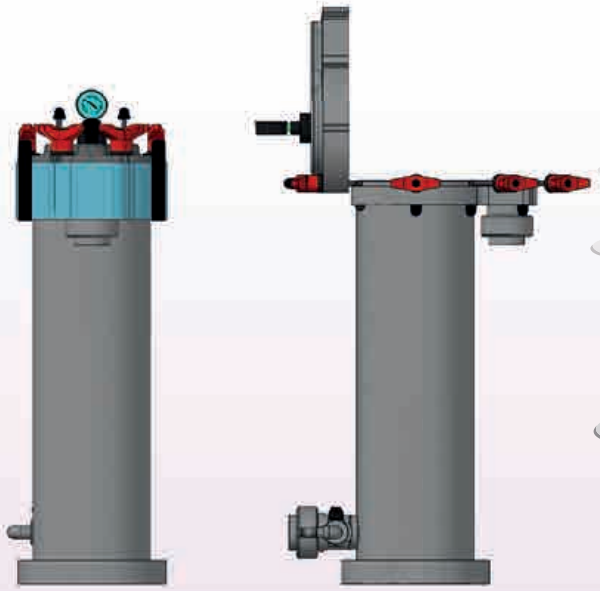

TOP VERSION						
SERIES	MATERIAL	INLET	SIZE	IN/OUT Ø mm	ATTACKS TYPE	OPTIONAL
CFB	_ = PP V = PVDF	T=TOP	1040 = SIZE 4	25	B= SOCKET UNIONS	G= Pressure gauge R= Splashproof lid Ring I= lid Interlock safety sensor
				32		
			1840H = SIZE 1	40		
			1880H = SIZE 2	50		
				63		
CFB	T		1880H	63	B	GR

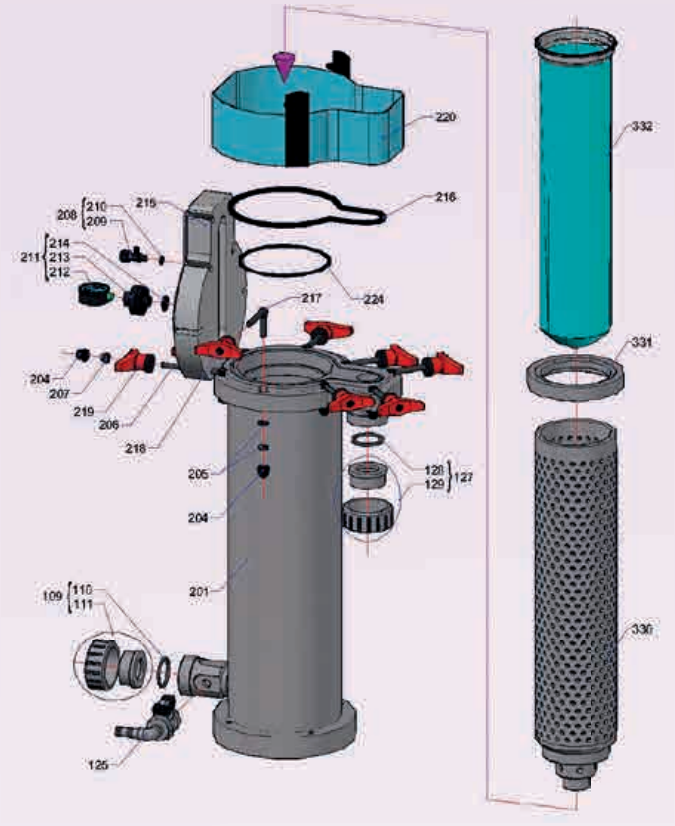

DESCRIPTION			
109	Discharge assembly	**211**	Pressure gauge assembly
110	O-Ring	**212**	Pressure gauge
111	Discharge	**213**	Guard
125	Drain valve	**214**	O-Ring
127	Inlet filter-housing assembly	**215**	Lid
128	O-Ring	**216**	Lid gasket
129	Connecting fitting	**217**	Short swing bolts
201	Filter body	**218**	Knob close two lobes
204	PP nut cap	**219**	Knob open two lobes
205	Nut & washer	**220**	Splash proof lid ring
206	Long swing bolts	**224**	O-ring cantering ring
207	Blind nut	**330**	Basket filter bag
208	Vent valve assembly	**331**	Centering ring filter bag
209	Vent valve	**332**	Filter bag
210	O-Ring		

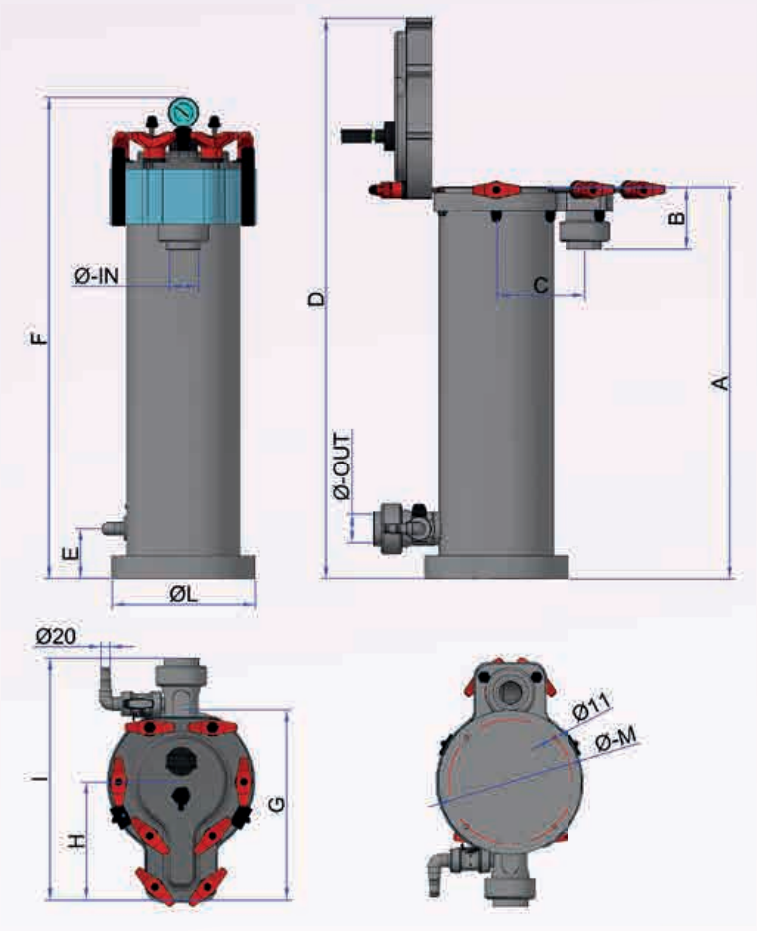

BAG FILTER HOUSING			
Type	**1040**	**1840 H**	**1880 H**
A	415	530	860
B	83	136	136
C	115	195	195
D	630	917	1231
E	70	110	110
F	570	730	1060
G	262	415	415
H	152	257	257
I	360	530	530
Ø L	220	315	315
Ø M	186	271	271
Ø IN	25-32	50-63	50-63
Ø OUT	25-32	50-63	50-63

PVDF version: dimension could change. Require drawing at our technical office

lafonte.eu

CFB SIDE

BAG FILTER HOUSING

ADVANTAGES

- Rugged construction
- Inert at chemicals
- Interchangeability bag filters and cartridges High Flow WH
- 3 years warranty

FEATURES

- PP solid monoblocc body
- PP and PVDF versions
- Swing bolts closure system with swing bolts
- Til lid
- Filter body inlet
- Union or flanged connections
- SIZE 1-2-4 bags availability
- Tmax exercise PP 85°C-PVDF 100°C
- Pmax exercise: 6 Bar @ 20°C

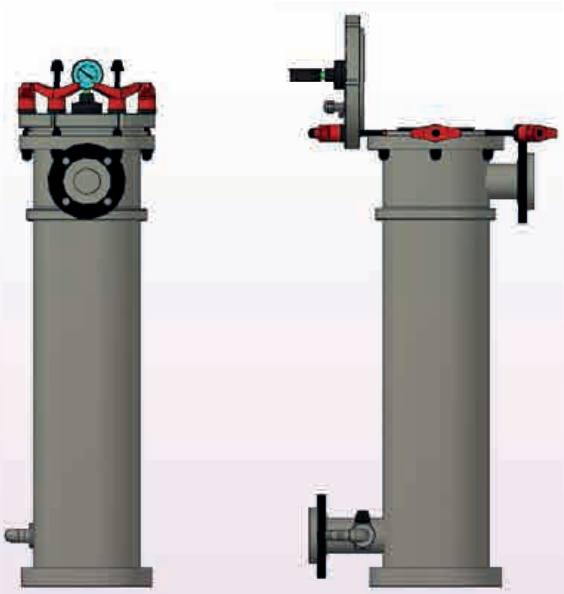

SIDE VERSION						
SERIES	MATERIAL	INLET	SIZE	IN/OUT Ø mm	ATTACKS TYPE	OPTIONAL
CFB	_ = PP V = PVDF	S=SIDE	1840 = SIZE 1	50	B= SOCKET UNIONS F= FLANGED	G= Pressure gauge R= Splashproof lid Ring I= lid Interlock safety sensor
				63		
			1880 = SIZE 2	75		
				90		
CFB	V	S	1880	75	F	GR

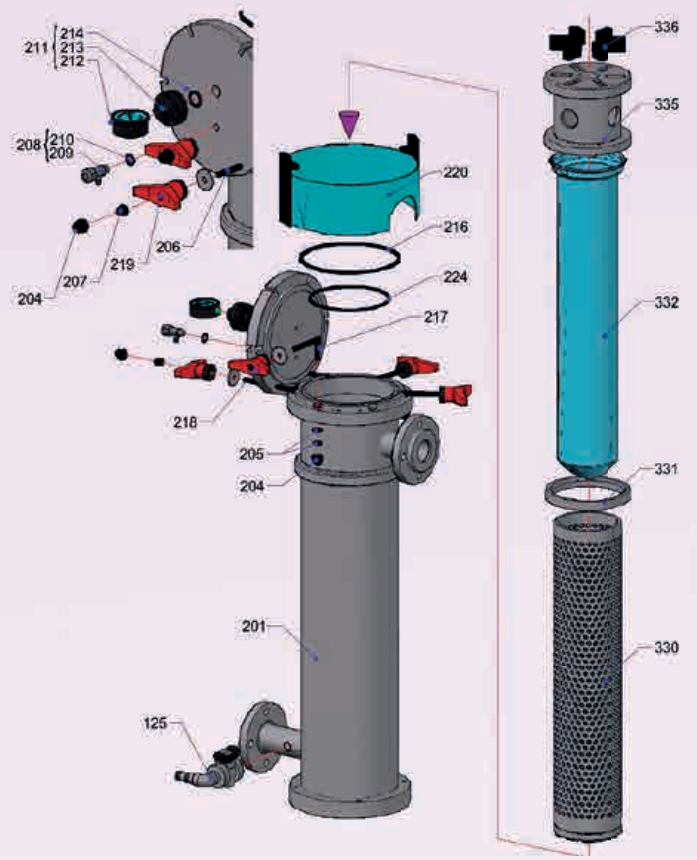

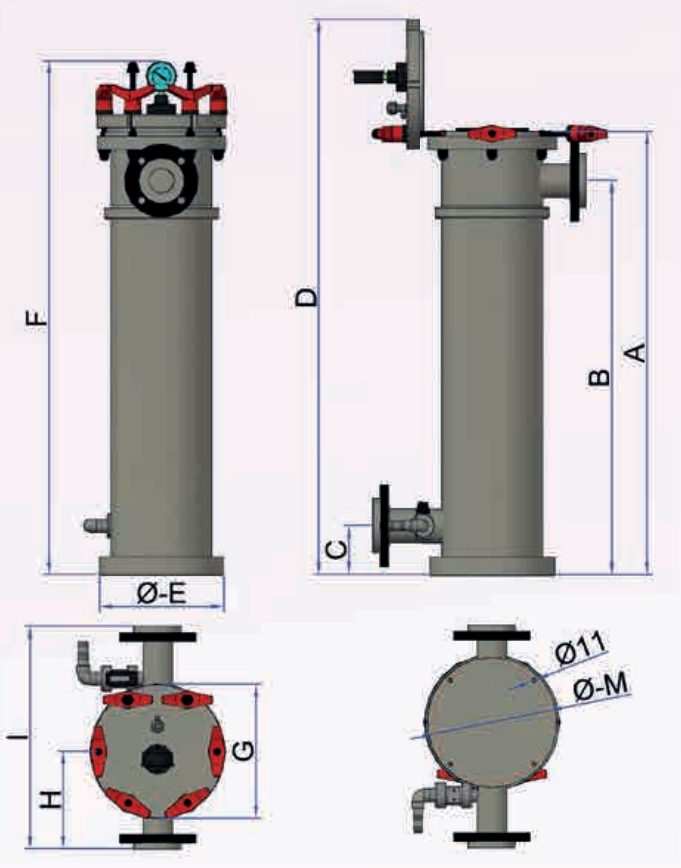

DESCRIPTION

125	Drain valve	**215**	Lid
201	Filter body	**216**	Lid gasket
204	PP nut cap	**217**	Short swing bolts
205	Nut & washer	**218**	Knob close two lobes
206	Long swing bolts	**219**	Knob open two lobes
207	Blind nut	**220**	Splash proof lid ring
208	Vent valve assembly	**224**	O-ring cantering ring
209	Vent valve	**330**	Basket filter bag
210	O-Ring	**331**	Centering ring filter bag
211	Pressure gauge assembly	**332**	Filter bag
212	Pressure gauge	**335**	Press bag holder
213	Guard	**336**	Spring press bag
214	O-Ring		

PP FILTER HOUSING

Type	1840			1880		
	63F	75F	90F	63F	75F	90F
A	700	700	700	1030	1030	1030
B	585	585	585	915	915	915
C	110	110	125	110	110	125
D	970	970	970	1300	1300	1300
Ø E	315	315	315	315	315	315
F	885	885	885	1215	1215	1215
G	315	315	315	315	315	315
H	210	210	225	210	210	225
I	480	480	495	480	480	495
Ø M	271	271	271	271	271	271

PVDF FILTER HOUSING

Type	1840			1880		
	63F	75F	90F	63F	75F	90F
A	665	665	665	995	995	995
B	555	555	555	995	995	995
C	110	110	125	110	110	125
D	925	925	925	1255	1255	1255
Ø E	280	280	280	280	280	280
F	830	830	830	1160	1160	1160
G	290	290	290	290	290	290
H	210	210	210	210	210	210
I	480	480	480	480	480	480
Ø M	255	255	255	255	255	255

GH Series

Sistemi di filtrazione alta capacità

High Performance Filtration systems

CARATTERISTICHE
FEATURES

CE

CAMERA FILTRANTE
- Costruzione monoblocco PP
- Coperchio ribaltabile per agevolare interventi di ordinaria manutenzione
- Elevata superficie filtrante
- Unità multicamera

ELEMENTI FILTRANTI
- Standard sacchi filtranti in PP, singolo o multi strato disponibili anche in Nylon o Poliestere
- Cartucce plissettate in PP puro ad ata superficie filtrante. Grado di filtrazione da 0,5 a 75 micron assoluti. Disponibile in versione filtrazione interno/esterno o esterno/interno.
- Elementi con carbone attivo

VANTAGGI CARTUCCE PLISSETTATE
- Alta superficie filtrante, grado filtrazione da 0,5 a 75 micron assoluti (fino al 99.9 % efficienza)
- Superficie filtrante da 2 a 11 m^2
- Versione 100 - 135 pieghe
- Capacità ritenzione solidi da 4 a 9 Kg per elemento
- Incremento resa ciclica prima del cambio filtri
- Riduzione costi per cambio filtri
- Riduzione costi manodopera
- Riduce i costi di trattamento scatri

STANDARD GH FILTER VESSEL FEATURES
- *All non-metallic construction for corrosive liquids and environments*
- *Easy access tilt lid with swing bolts*
- *High surface area, flat gasket for positive sealing*
- *Multiple chamber units*

FILTER MEDIA OPTIONS
- *Standard polypropylene felt bags, single or multi-layer (up to 10 layers). Also available in nylon, polyester or nomex.*
- *High performance pleated bag elements constructed in all pure polypropylene (micron ratings from 0.5 to 75 micron absolute). available in type inside to outside flow pattern or type outside to inside flow pattern. Glass fiber elements are also available.*
- *High capacity activated powder carbon elements*

PLEATED BAG ELEMENTS OUTPERFORM THE MARKET
- *High surface area, positive sealing, absolute rated elements from 0.45 to 75 micron (up to 99.9 % removal efficiencies)*
- *120 - 135 pleats per cartridges*
- *High surface area (from 3,5 to 11 m^2 per element types)*
- *High solids loading (up to 4 - 9 Kg per element)*
- *Longer service life*
- *Dramatic cost savings and rapid R.O.I. over high end, absolute rated cartridges*
- *Reduction in labor costs*
- *Minimized waste disposal costs*

la fonte srl.it

GH Series

Sistemi di filtrazione alta capacità

High Performance Filtration systems

A B C

UNA MACCHINA 3 SOLUZIONI

- Sacco filtro standard (A)
- Cartuccia plissettata, alta superficie filtrante (B)
- Cartucce carbone attivo 226 (C)

EXCLUSIVE 3 IN 1 DESIGN

- *Standard Bag figures (A)*
- *High Performance Pleated Elements figures (B)*
- *226 High Capacity Cartridge figures (C)*

Pompa filtro *Filter Unit* Mod.	Motore *Motor* Kw	Portata Pompa *Pump Flow Rate* l/min.	Cartuccia tipo *Cartridges type* Ø x L"	Cartuccia *Cartridges* 100 *pieghe pleats* m2	Cartuccia *Cartridges* 135 *pieghe pleats* m2	Q(l/min.) 20-75 micron	Q(l/min.) 10 - 5 micron	Q(l/min.) 2-0,5 micron
GH615MPP101	0,25	110	Ø 180x15	2	2,8	120/170	100/140	75/100
GH615MPP201	0,55	200	Ø 180x15	2	2,8			
GH630MPP251	1,1	250	Ø 180x30	4	5,6	250/350	200/280	150/200
GH630MPP302	1,5	340	Ø 180x30	4	5,6			
GH640MPP252	1,1	250	Ø 180x40	5,5	7,5	350/460	280/370	200/280
GH640MPP302	1,5	340	Ø 180x40	5,5	7,5			
GH640MPP500	2,2	500	Ø 180x40	5,5	7,5			
GH660MPP501	3	600	Ø 180x60	8	11	500/680	400/550	300/480
GH660MPP831	4	800	Ø 180x60	8	11			

CE

lafonte.eu

FLEX

Sistemi di filtrazione versatili
Versatile filter systems

Le pompe filtro Flex sono state progettate e costruite per la filtrazione di liquidi corrosivi, chimicamente compatibili chimicamente con i componenti costruttivi della pompa e del filtro. Il funzionamento della macchina è consentito con temperature d'esercizio del fluido fino ad un massimo di 95 °C per la versione in PVDF e 80 °C per la veresione realizzata in PP.

Flex filter systems have been design to respond at filtration need of corrosive solution compatible with material of filter system. Temperature max exercise for PVDF version is 95°C wihle PP one can work till 80°C.

CARATTERISTICHE
FEATURES

CE

- Pompa verticale senza tenuta
- Applicazione interna od esterna alla vasca
- Versione intercambiabile Dischi/Cartucce
- Disponibile PP - PVDF

- *Seal less vertical pump*
- *Intank or out of the tank application*
- *Discs & cartridges interchangeable kit*
- *PP & PVDF version*

la fonte srl.it

FLEX

Sistemi di filtrazione versatili

Versatile filter systems

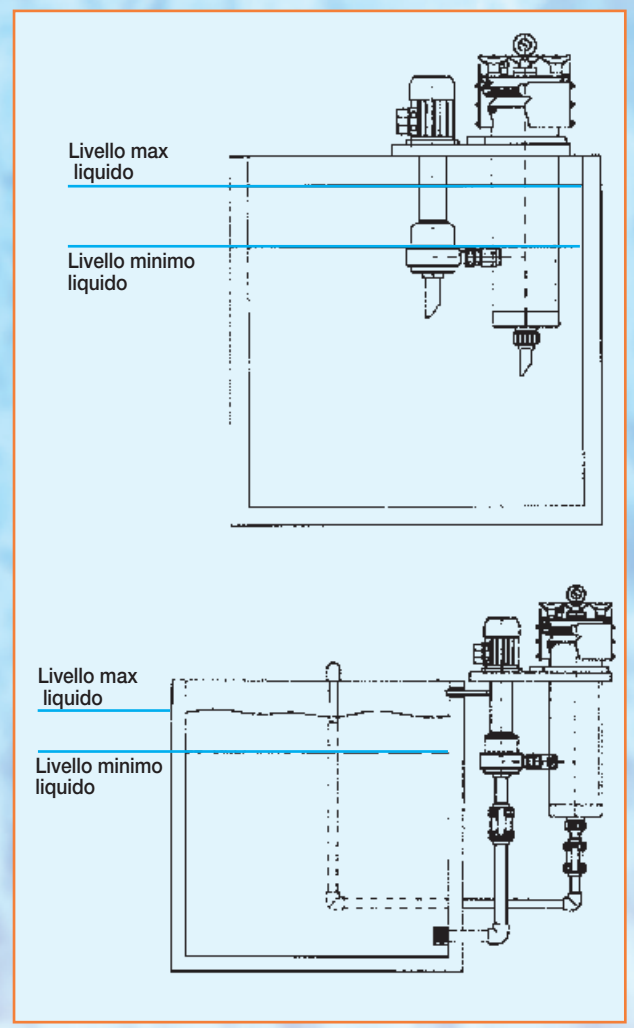

ALLACCIAMENTO INTERNO ALLA VASCA

INTANK APPLICATION

ALLACCIAMENTO ESTERNO ALLA VASCA

OUT OF TANK APPLICATION

Mod.	Dischi *Discs* *Ø x N°*	Cartuccie *Cartridges* *N° x L"*	Pompa *Pump* *Mod.*	Q max pompa *Q max Pump*	KW	T max es.
FX		1 X 10	EASY P 3000/N	2500	0,12	PP 80 PVDF 95
FX		1 X 20	EASY P 3000/N	2500	0,12	PP 80 PVDF 95
FX	130 x 35	3 X 10	EASY P 3000/N	2500	0,12 0,25	PP 80 PVDF 95
FX	130 x 66	3 X 20	EASY P 3000/N EASY P 8000/N	2500 6500	0,12 0,25	PP 80 PVDF 95
FX	200 x 35	7 x 10	EASY P 3000/N EASY P 8000/N	3000 6500	0,12 0,25	PP 80 PVDF 95
FX	200 x 66	7 x 20	EASY P 8000/N EASY P 10000/N EASY P 15000/N	6500 10000 13500	0,25 0,55 1,1	PP 80 PVDF 95
FX	200 x 66	12 x 20	EASY P 15000/N EASY P 25000/N	13500 23000	1,1 2,2	PP 80 PVDF 95

CE

Since 1975 processing Corrosive Solutions

EASY F

INTANK VERTICAL PUMPS

Intank cartridges filter system

EASY F - Inlet cartridge filter units filter element is placed directly on suction pump
They have to be place inside process tank.

Feautures:

- Dry run capability
- No leakages outside of process tank della vasca di lavoro
- Easy set up .
  Any piping to connect at filter unit.
  Only electrical connection.
- Easy maintenance:
  Fast filter element replacemnet

Capacity:

à Filter units EASY F are made in PP or PVDF,
Istandard version are made with:
one cartridge 10" o 20"
for cartridegs 10" o 20"
Flow rate from 1000 to 5000 l/h

EASY F				
Model EASY F	1500/N	2000/N	4000/N	5000/N
Flowrate l/h	1500	2000	4000	5000
Cartridges (n°x l")	1 x 10"	1 x 20"	4 x 10"	4 x 20"
Surface Area. m²	0,30	0,60	1,25	2,50
Power KW	0,13	0,13	0,26	0,26
Suction ø mm	25	25	30	30
Discharge ø mm	20	20	25	25
Weigt kg	5	5,5	10	11
pump depth mm	250	250	300	300
filter depth mm	530	780	570	820

Other:

- Suitable for Eductor application

- Materials: Bolipropilene PP (up 70°C)
- Materials: Polypropilene PP (up 70° C)
  PVDF (up 95° C)
- Wound depth,carbon &melt blwn cartrdiges
- Customized version
-

CE

Since 1975 processing Corrosive Solutions

COMPACT

Sistemi filtranti - *Quick change filter unit*

CARATTERISTICHE GENERALI

SISTEMA DI ALIMENTAZIONE E FILTRAZIONE LIQUIDI PER MACCHINE ORIZZONTALI PER CIRCUITI STAMPATI

- Potenza fino a 5,5 Kw
- Elemento filtrante 10″ - 20″
- Cambio rapido elemento filtrante
- Sensore di sicurezza chiusura coperchio

MATERIALE COSTRUTTIVO

- PP - Titanio - EPDM - Viton®

MAIN FEATURES

WET PROCESSMACHINE PUMP & FILTERING SYSTEMS

- *Motor power to 5,5 Kw*
- *Filter element 10″ - 20″*
- *Quick filter replacement*
- *Interlock sensor*

MATERIAL

- *PP - Titanium - EPDM - Viton®*

lafonte™.eu

VERTICAL PUMP

SERIES CS

Vertical pump for PCB wet process machines

la fonte srl.it

VERTICAL SERIES CS PUMP

Vertical pump for PCB wet process machines

Vertical pump series CS have been properly gesigned for wet process PCB machines application.

Actually the particular construction features as high pressure impeller design, pump shaft available in Inox AISI316, Titanium or Astelloy, fumes seal to protect motor make them ideal for application on these machines.

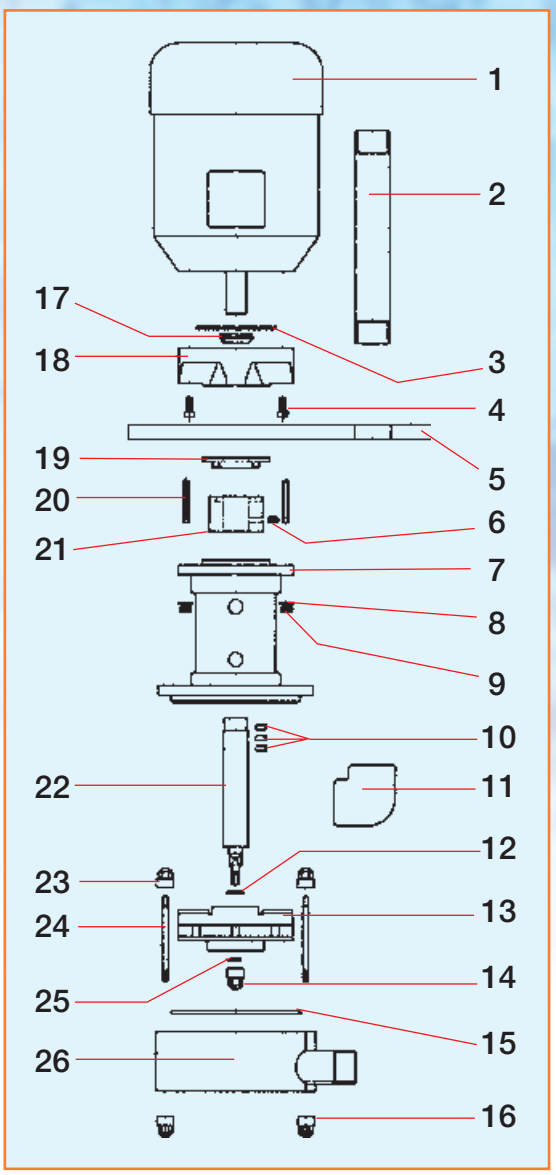

Please contact us for additional technical details.

Pump Mod.	Motor Kw	Q max l/min.	H max m.	Outlet Attack mm.
V2B3PCSTILV	1,1	220	18	32
V3A1PCSTILV	1,5	380	20	40
V3A2PCSTILV	2,2	470	24	40
V3B1PCSTILV	3	550	26	50
V3B2PCSTILV	5,5	650	32	50

CE

1 Motor
2 Outlet pipe
3 PTFE disc
4 Screws TCCE 8x20
5 PP flange
6 Grub screw
7 Pump body
8 Titanium washer
9 Titanium nut
10 Grub screw
11 Elbow
12 O-Ring
13 Impeller
14 Impeller cap
15 O-Ring
16 Pump hausing cap
17 Viton V-Ring
18 Fumes seal
19 Static labyrinth
20 Tie rod
21 Rotating labyrinth
22 Titanium shaft
23 Pump housing nut
24 Titanium tie rod
25 O-Ring
26 Pump housig

ASTERX

Interlock Filter

CE

la fonte srl.it

ASTERIX

- Massive PP filter housing
- Available in the following version:
  - 10" - 20" lenght
  - Out side tank application
  - Inside tank application
  - Right or left out let position
- Pump stop proximity safety switch placed onto unit lid
- Antisplash cap
- EPDM or VITON gaskets

Interlock Filter

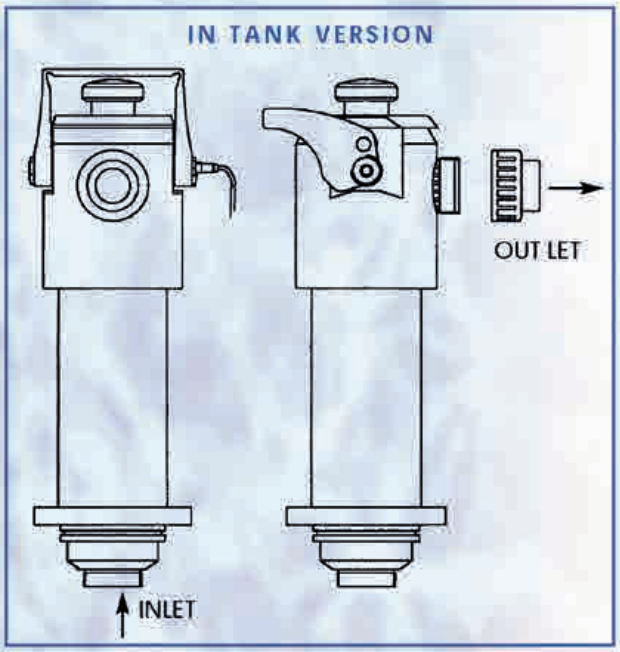

Please contact us for additional technical details.

la fonte s.r.l.
P.le Cocchi, 6 - 21040 Vedano Olona (Va) Italy
Tel. +39 0332 402168 - Fax +39 0332 402169
e-mail: info@lafontesrl.it - www.lafontesrl.it

la fonte srl.it

lafonte.eu

Since 1975 processing Corrosive Solutions

lafonte.eu®

METAL RECOVERY SYSTEMS

REM
Recupero Metalli

Metal Recovery System

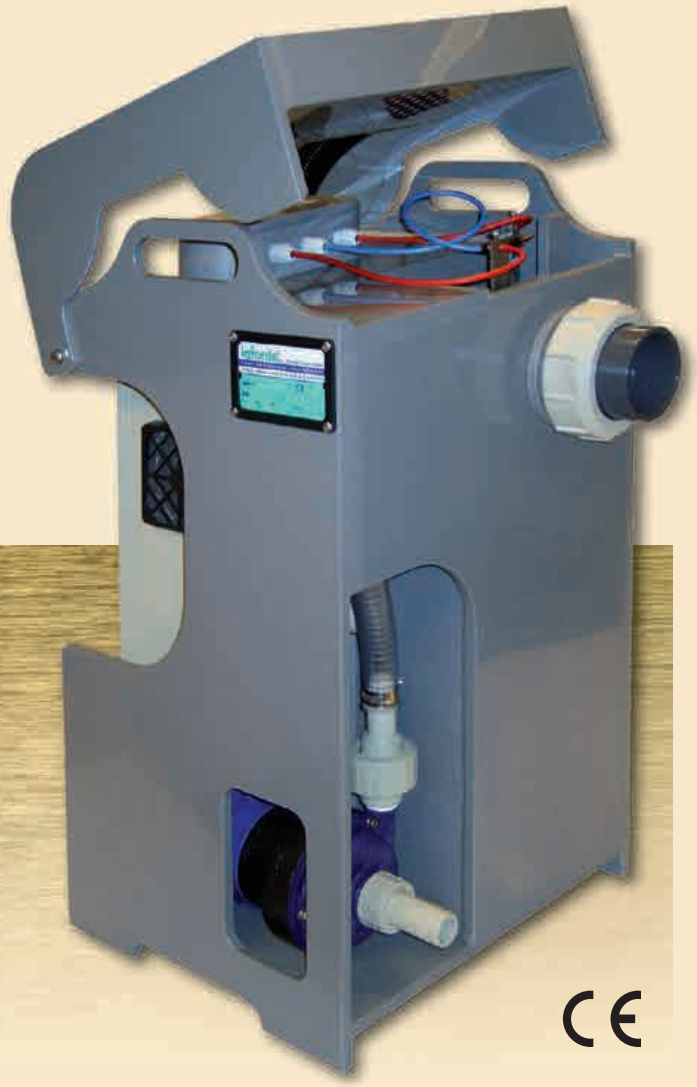

VANTAGGI

I sistemi di recupero metalli preziosi serie **REM** sono raccomandati in diversi settori produttivi, tra i quali: **Chimico - Galvanico - Fotografico - Circuiti stampati - Trattamenti metallici di superficie.** Il recupero dei metalli preziosi da soluzioni esauste derivanti dai vari processi produttivi costituisce una notevole fonte di reddito a costi di gestione molto contenuti.

Le celle elettrolitiche REM consentono:

- Un rapido ritorno dell'investimento
- Recupero fino al 99% di metallo in soluzione
- Sicurezza e semplicità di utilizzo
- Costruiti in PPS antifiamma garantisce alta resistenza meccanica e chimica sia con soluzioni acide che alcaline
- Manutenzione minima
- Metallo recuperato, facilmente rivendibile
- Cappa aspirazione
- Viteria titanio
- Anodi ossidi misti
- Connessioni in titanio per anodi e catodi

ADVANTAGES

REM *Precious Metal Recovery System is recommended for use in several sectors such as:* ***Chemical - Plating - Photographic - Printed circuit board - General Metal Finishing.*** *Recovery of precious metal from used solution allows a significant part of the initial investment into operating profit.*

REM system has the following advantages:

- *Recovery of up to 99% of precious metal*
- *Easy possibility to sell recovered precious metals*
- *Fast investment return*
- *Ease of use*
- *PPS flameproof construction avoids any problem with possible chemical incompatibility*
- *Minimum maintenance*
- *Fume hood to contain any fumes and evaporation.*
- *Titanium screws*
- *Mixed oxide anodes*
- *Connections for titanium anodes and cathodes*

MODELLO ***MODEL***	Vol. cella *Cell. Vol.*	Ossidi misti *Mixed Oxides*	Dimensioni catodi *Catode dimensions*	Pompa *Pump*	Pump QMAX (m^3/h)	H MAX (m)	Kw	In/Out	Dimensioni L- P-H *Dimension L- P-H (mm)*	Raddrizatore *Rectifiers*
RM MINI	7 lt	2/1	140x240 mm	P09	0,7	2	0,06	20/50	320X280X400	12V 30A
RM 5E	9 lt	2/1	140x490 mm	MPC042	1,8	5	0,12	25/63	320X380X620	12V 30A
RM 20	28 lt	3/2	270x250 mm	MPC042	1,8	5	0,12	25/63	400X430X950	12V 30A
RM 50	28 lt	5/4	150x460 mm	MPC042/MPP051	1,8/3	5/7	0,12	25/63	560X410X670	12V 50A
RM 100	100 lt	4/4	400x490 mm	MPC042/MPP051	1,8/3	5/7	0,12	32/63	850X620X1150	12V 200A

REM
Recupero Metalli

Metal Recovery System

PROCESSO DI FUNZIONAMENTO

Il principio di funzionamento del sistema **REM**, si basa sull'elettrodeposizione dei metalli per via elettrolitica, esso ha luogo quando ad una soluzione contenente ioni metallici viene applicata una corrente elettrica, provocando il movimento degli ioni positivi verso il catodo sul quale si deposita il metallo prezioso.

OPERATING PRINCIPLE

REM *operating principle consist of metal recovery by electrolytic method i.e. when the solution with precious metal ions works under electric current it generates movement of the positive ions towards the cathode where the precious metal will be deposited.*

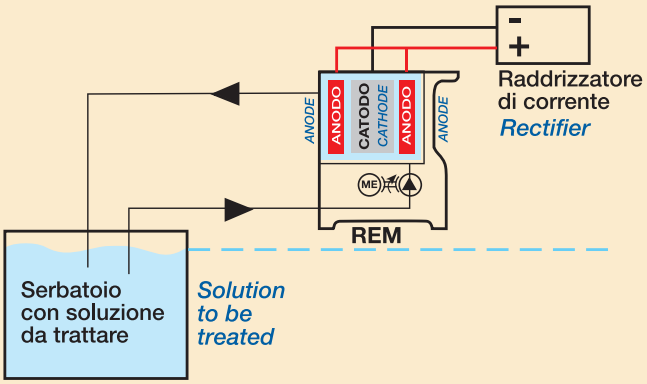

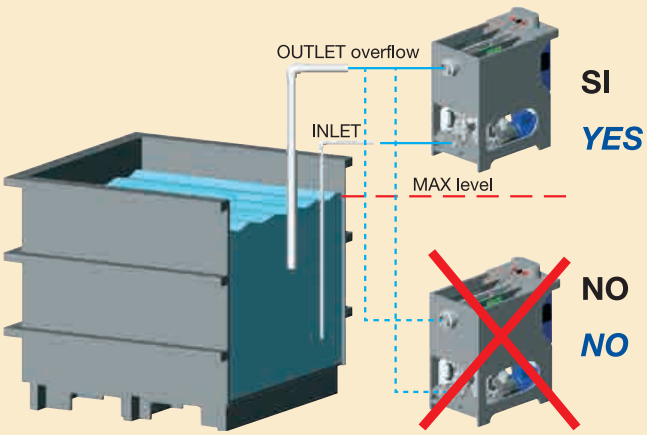

SOSTITUZIONE CATODO
CATHODEREPLACEMENT

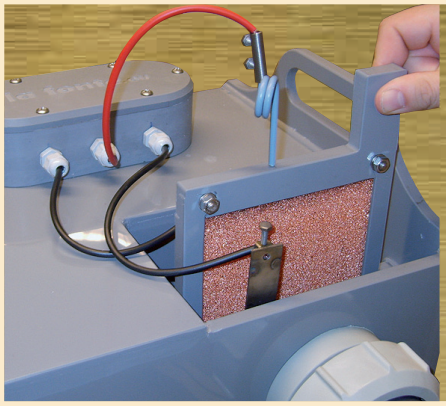

1

Estrarre telaio porta-catodo in PPS dalla vasca di processo

Remove the cathode housing from the electrolytic cell

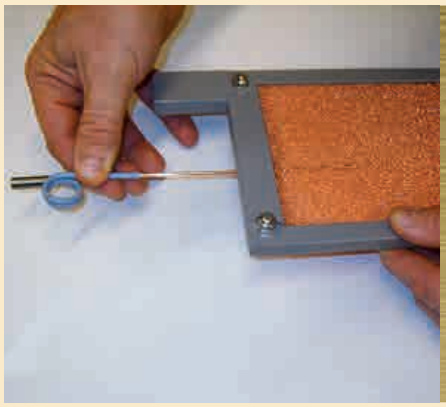

2

Estrarre puntalino in rame

Remove the contact from the cathode

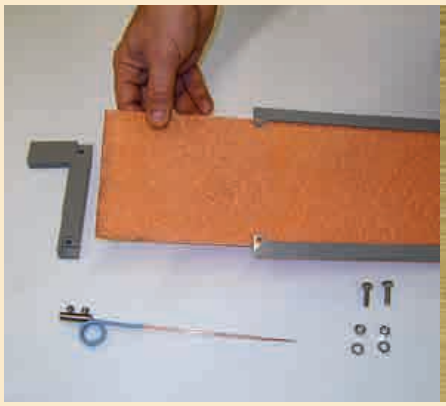

3

Estrarre la spugna connettiva e sostituirla

Fit a new 'sponge' into the frame, reconnect contact and replace cathode housing back into the electrolytic cell.

LAFONTE.eu si riserva la facoltà di apportare le modifiche tecniche che riterrà opportune senza darne preavviso.

LAFONTE.eu reserves the right to make technical changes deemed necessary without prior notice.

REM SMALL

Recupero Metalli

DESCRIZIONE

I sistemi di recupero metalli preziosi serie REM-small da soluzioni esauste derivanti dai vari processi produttivi costituisce una notevole fonte di reddito a costi di gestione molto contenuti.

VANTAGGI

- Un rapido ritorno dell'investimento
- Recupero fino al 99% di metallo prezioso, facilmente rivendibile
- Semplicità di utilizzo
- Manutenzione minima

CARATTERISTICHE

- Dimensioni ridotte
- Costruiti in PP antifiamma garantisce alta resistenza meccanica e chimica sia con soluzioni acide che alcaline
- Cappa aspirazione
- Viteria titanio
- Anodi ossidi misti
- Connessioni in titanio per anodi e catodi

TIPOLOGIE DI FILTRAZIONI

- Cartuccia Filtrante da 10"

MODEL	Cell.Vol.	Mixed Oxides	Catode dimensions	Pump	Filter Unit	Pump QMAX (m^3/h)	H MAX (m)	Kw	Rectifiers
SIZE 1	0,8 lt.	2/1	80x185 mm	MPC039	MINI10/N 042PP	1,5	5	0,12	12V 30A
SIZE 2	1,5 lt.	2/1	80x435 mm	MPC039	MINI10/N 042PP	1,5	5	0,12	12V 30A
SIZE 5 A	1,3 lt.	2/1	150x220 mm	MPC039	MINI10/N 042PP	1,5	5	0,12	12V 30A
SIZE 5 B	3,3 lt.	2/1	150x460 mm	MPC039	MINI10/N 042PP	1,5	5	0,12	12V 50A

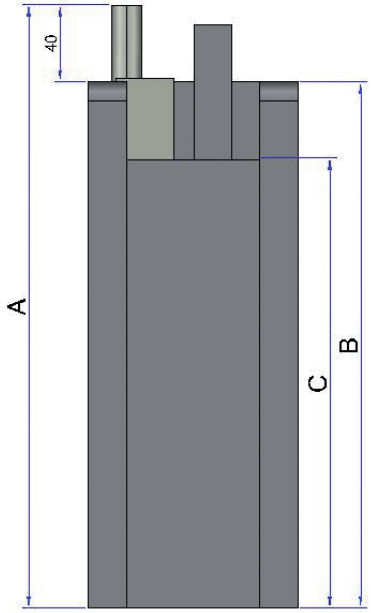

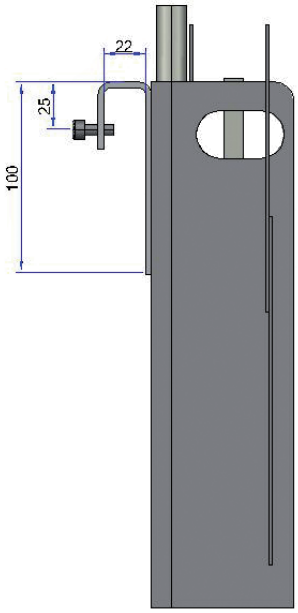

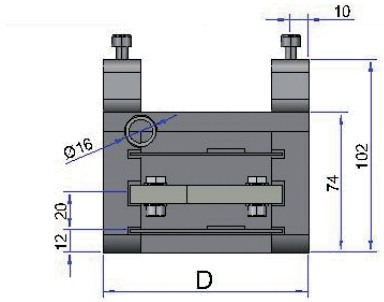

MODEL	Pump QMAX (m^3/h)	H MAX	Overall dimensions (mm)			
			A	B	C	D
SIZE 1	1,5	5	315	275	205	110
SIZE 2	1,5	5	590	550	455	110
SIZE 5 A	1,5	5	315	275	205	180
SIZE 5 B	1,5	5	590	550	455	180

REM
Recupero Metalli
STAND ALONE

DESCRIPTION

REM series precious metal recovery systems are recommended in different production sectors, including:
Chemical - Galvanizing - Photography - Printed circuit boards - Metallic surface treatments.
Recovery of precious metals from spent solutions, left over after various production processes, constitutes a significant source of revenue with low operating costs.

ADVANTAGES

- Quick payback time
- Recovery of up to 99% of the precious metal
- Easy to use
- Minimal maintenance

CARATTERISTICHE

- Made in PP, which guarantees high mechanical and chemical resistance to both acid and alkaline solutions
- Compact size
- Titanium screws
- Mixed oxide anodes
- Titanium connections for anodes and cathodes

TYPES OF CARTRIDGES

MODEL	Dim. Inches	Recoverable Metal (max.)
Cartuccia Ramata/Nichelata	10″	3 kg
	20″	6 kg

MODEL	Vol. Cell.	Mixed Oxides	Cathode Dimensions	Pump	QMAX (m^3/h)	H MAX (m)	kW	In/Out	Straightener	Filtering Cartridge
STAND ALONE FR 10	6 lt.	1	Ø 130 H220	EVT7PP	6,8	12	0,25	32/25	12V 30A	10″
STAND ALONE FR 20	12 lt.	1	Ø 130 H440	EVT7PP	6,8	12	0,25	32/25	12V 30A	20″
STAND ALONE F	6 lt.	1	Ø 130 H220	EVT7PP	6,8	12	0,25	32/25	12V 30A	10″
STAND ALONE	3 lt.	1	Ø 130 H220	MPP051PP	3,6	0,9	0,12	25/25	12V 30A	-

REM SA

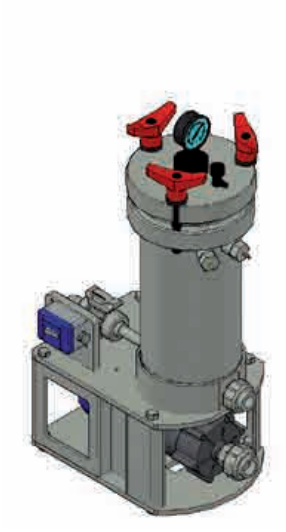

REM SA-F

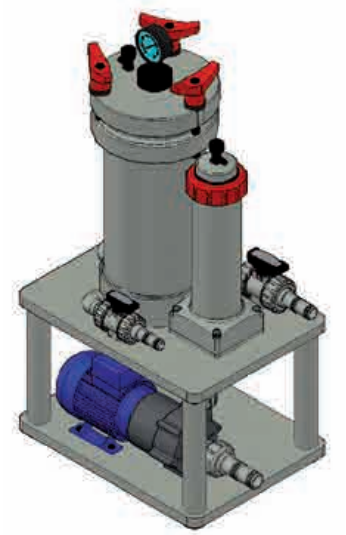

REM SA-FR

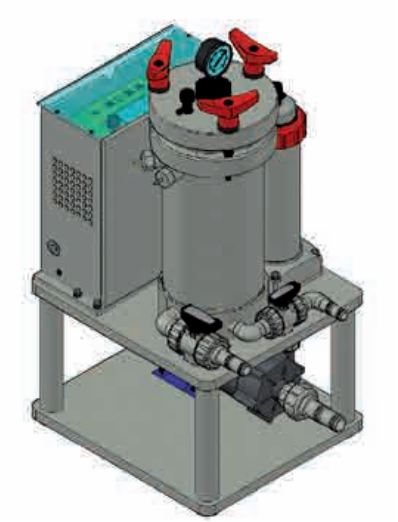

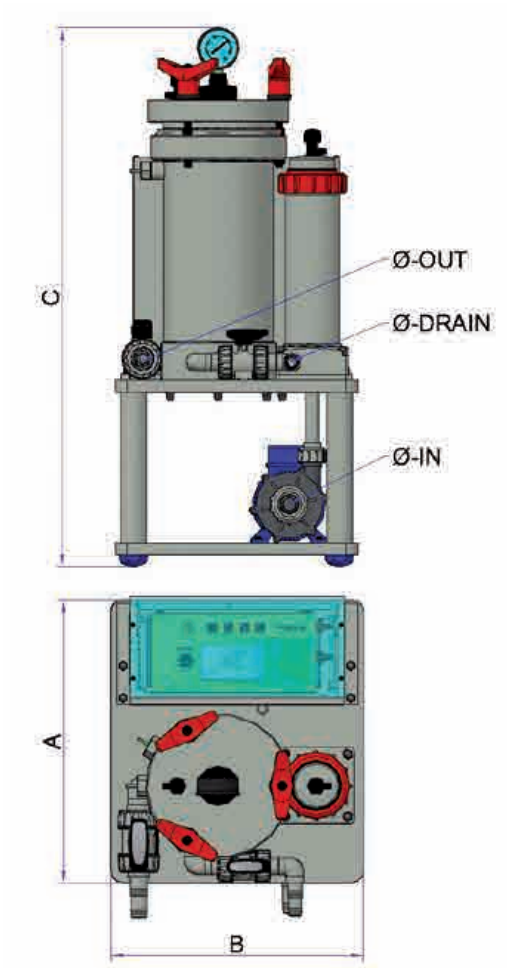

Dimensions:

MODELLO	A	B	C	Ø-IN	Ø-OUT	Ø-DRAIN
SA	460 mm	270 mm	790 mm	25 mm	25 mm	20 mm
SA-F	450 mm	340 mm	895 mm	32 mm	25 mm	20 mm
SA-FR	450 mm	400 mm	895 mm	32 mm	25 mm	20 mm
SA-FR20	705 mm	400 mm	895 mm	32 mm	25 mm	20 mm

MFR

Metal Filtering Recovery

DESCRIPTION

Filtering systems for recovering precious metals - MFR series - are used in the jewellery industry to recover small parts of precious metals, through filters that can have a filtering degree as small as 1 absolute micron.

ADVANTAGES

- Quick payback time
- Recovery of up to 99% of the precious metal
- Easy to use
- Minimal maintenance

SPECIFICATIONS

- Made in PP, which guarantees high mechanical and chemical resistance to both acid and alkaline solutions
- Suitable for processing centralised hand washing stations

TYPES OF FILTRATION

Carbon Canister

Discs

Oilsorb Canister for degreasing process

High flow JUMBO pleated Cartridge

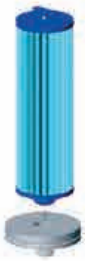

Various Cartridges for different applications

MODEL	Cartridges (q.ty x dim.)	Camera Filtrante (sacco)	Discs		Diaphragm pump (PP)	Material	Optional	Optional
MFR	3C1 (3X10”)	18X40	7D1	=paper P=Meraclon T=PTFE	-	MicroBox	PP PVDF	G=pressure gauge V=valve W=portable system R=splash guard C=carbon basket D=disk package
	7C1 (7X10”)	18X40	7D1		-	Bx05		
	7C2 (7X20”)	18X40	7D1		-	Bx09		
	7C2 (7X20”)	18X80	7D2		-	Bx09		
	12C2 (12X20”)		24D2		35x52 (350x52 dischi)	Bx09		
	24C2 (24X20”)		36D2		46x40 (460x40 dischi)	Bx10		

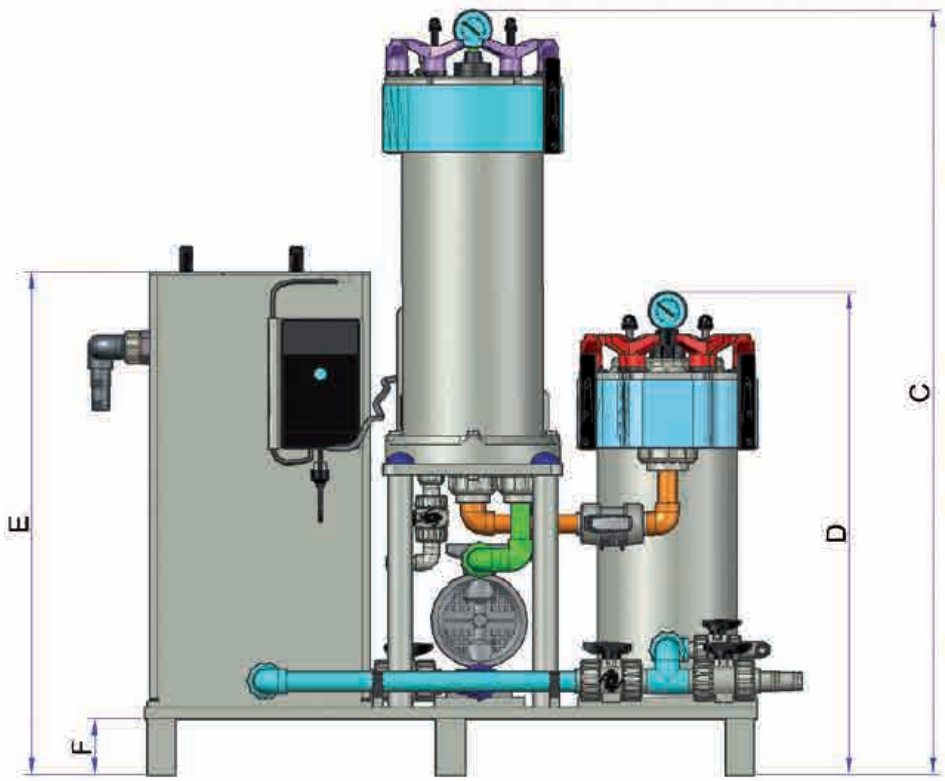

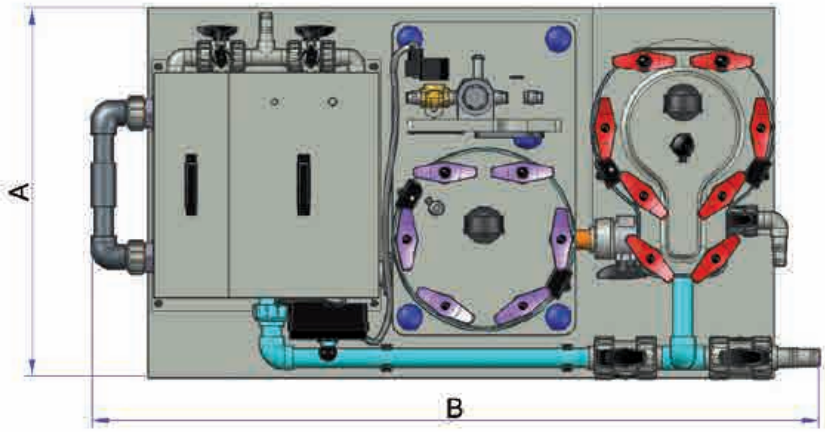

MODEL	Overall dimensions (mm)							
	A	B	C	D	E	F	Ø-IN	Ø-OUT
MFR-3C1-1840-MCB 7D1	650	1280	1125	870	900	100	32	32
MFR-7C1-1840-BX05 7D1	650	1280	1125	870	900	100	32	32
MFR-7C2-1840-BX09 7D1	650	1280	1380	870	900	100	32	32
MFR-7C2-1880-BX09 7D2	650	1280	1380	1200	900	100	32	32
MFR-12C2-24D2-BX09	1000	1750	1380	1380	930	57	40	40
MFR-24C2-36D2-BX10	1000	1750	1380	1380	930	57	40	40

UNDER SINK

DESCRIPTION

These filtering system are used under the sinks in the jewellery industry, to recover small parts of precious metals through filters that can have a filtering degree as small as 1 absolute micron.

ADVANTAGES

- Quick payback time
- Recovery of up to 99% of the metal in solution
- Easy to use
- Minimal maintenance

SPECIFICATIONS

- Made in PP, which guarantees high mechanical and chemical resistance to both acid and alkaline solutions
- Suitable for water at hand washing stations

TYPES OF FILTRATION

MODEL	Filter System 1	Filter System 2	Pump	Pump Material	Sink	Faucet	FlowRate (l/h)	H max	FILTERS			
									Bag		Disc	Cartridge
US	3C1 3D1 104	000	BH02 (MCB0)	P	0 1 = 1 L = single long	0 1 2	1.800	4	(base) Ø 180x400	(104) Ø 110x400	(3D1) Ø 150x35	(3C1) *3x10"*
	3C1	3C1 104 3D1										

Coding example:

US	3C1	104	BH02	P	L	2

US-MCB 3C1 / US-MCB 3D1 / USCM 1-3 3C1 / USCM 1-3 3D1

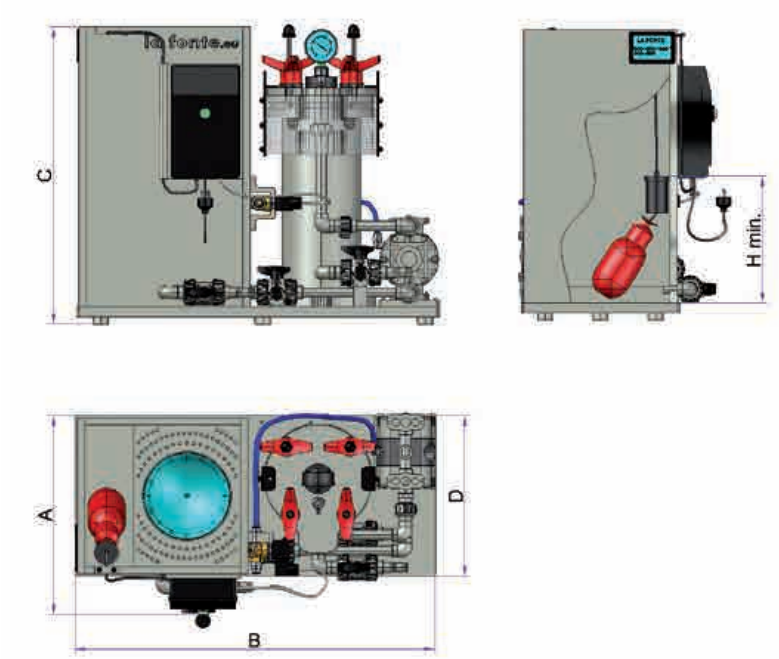

US-MCB /USCM 1-3

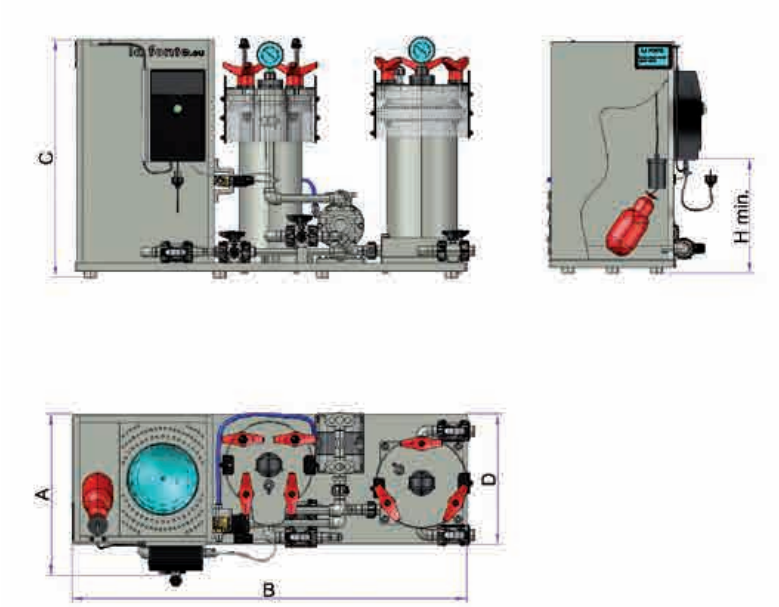

Under-Sink Filter Dimensions

MODEL	Filter System 1	Filter System 2	A (mm)	B (mm)	C (mm)	D (mm)	H min
US	3C1 3D1 104	000	410	740	605	330	280
	3C1	3C1 104 3D1		1.000			

Since 1975 processing Corrosive Solutions

lafonte.eu®

PURIFICATION SYSTEMS

la fonte srl.it

DEPUR

DEPURAZIONE ORGANICA E SELETTIVA

PURIFICATION AND SELECTIVE RECOVERY

CE

APPLICAZIONI

CON CARBONE ATTIVO:

- **Assorbimento di impurità organiche (es.: potabilizzazione di acque) depurazione di bagni galvanici decolorazione, ecc.**

CON RESINE A SCAMBIO IONICO

- **Separazione di metalli inquinanti da bagni galvanici**
- **Recupero di ioni metallici da lavorazioni varie**
- **Filtrazioni di ioni in sospensione**
- **Demineralizzazione di acque**
- **Addolcimento di acque in ciclo manuale**

APPLICATION RANGE

WITH ACTIVE CARBON:

- ***Select organic water alligator elements***
- ***Plating baths purification***

WITH RESINS

- ***Selectionof heavy alligators metal from plating solution***
- ***Recovery of ions metal***
- ***Filtration of ions on***
- ***Suspenction water demineralization***

la fonte srl.it

DEPUR

FUNZIONAMENTO

L'apparecchio è composto da una colonna, da una serie di tre valvole e attacchi in entrata ed in uscita. nella colonna sono sistemati il sacco che contiene il carbone o la resina e dei filtri a cartuccia.

Le tre valvole consentono ogni possibilità di regolazione compresa l'esclusione totale dell'apparecchio stesso al fine di permettere eventuali operazioni in corso a monte della colonna.
Questa operazione consente la sostituzione del sacco in pochi secondi " a mani pulite" e senza pullulazione, ed eventualmente anche la sostituzione delle cartucce filtranti.

USE

Equipment is composed from one coloumn having three valves. It includes bag which can contain granular carbon or resins, a series of filter cartridges placed before chamber outlet avoid that any particle by pass the chambre.

The three valves system permit to by pass completely column this system is particuraly suitable in case depur is connected to a filter unit in this way it will be possible to use it for only filtration or also for purification.
By pass also avoid to stop filtration when granular carbon has to be replaced.

VATAGGI

Oltre al trattamento in se stesso vanno considerati:

AUMENTO DELLA PRODUTTIVITÁ
Con il DEPUR l'utilizzo dell'impianto è continuo 24 ore su 24, senza arresti della produzione, infatti, i normali interventi operativi come ad esempio la sostituzione del sacco, avvengono senza mai interrompere il ciclo produttivo.

COSTI DI GESTIONE
con il DEPUR L'intervento manuale non specializzato è ridotto al minimo sia come periodicità che come durata. Un risparmio energetico é dato dall'accoppiamento di impianti già in funzione ed è principalmente un lavoro pulito per un ambiente pulito.

MIGLIORE QUALITÁ
Non da ultima é fornita da una continua e costante depurazione che garantisce l'uniformità del liquido trattato, in contrapposizione alle saltuarie depurazioni che normalmente vengono in special modo nel trattamento con carbone attivo .

AVANTAGES

In addition to its proper use other advantages are:

Depur permit to work 24 hours a days - 7 days per week without stop production.

In effect standard operation of maintenance as carbon replecement can be done without stop production cicle.
Depur strongly reduce maintenance cost.

QUALITY
The continue purification permit to guarantee an excellent costant quality level of the solution.

CE

MATERIALE DI CONSUMO: Carbone - Resine vari tipi - Sacchi polipropilene.
ACCESSORI A RICHIESTA: flussimetro - Conduttimetro - Manometro in acciaio inox.

CONSUMABLE: Carbon - Resins - PP bag
OPTIONALS: Flowmeter - Conductivmeter - Manometer .

DEPUR

Mod.	L.	Carbone *Carbon* Kg.	Resina *Resin* Kg.	Cartucce *Cartridges* N.	Ø Entrata ed uscita *Ø Inlet / outlet* mm.	Portata oraria *Flow rate* max.	Misure d'ingombro *Dimension* mm.
3	6	3	4	1 x 4"	25	400	180 x 180 x 930
6	14	6	10	2 x 4"	30	800	220 x 220 x 930
12	27	12	19	3 x 4"	40	1500	300 x 300 x 950
24	54	24	38	6 x 4"	40	3000	400 x 400 x 970

Questi apparecchi possono essere forniti:
- Da collegare a pompe, pompe filtro o altro già installato.
- Collegati a pompe in combinazione con pompe filtro, accoppiati in serie o in batteria.

Depur can be applied:
- *To connect to pumps, filter or other existing equipment.*
- *In combination with filter units connected in temes or in battery.*

Since 1975 processing Corrosive Solutions

SELECROM

Resin Metal Recovery System

Sistema di depurazione selettiva dei metalli inquinanti i bagni di cromatura trivalente

Vantaggi:
Garantito un costante livello di qualità del bagno

Système d'épuration sélective des métaux polluants les bains de chromage trivalent

Avantage:
Un constant niveau de qualité du bain est garantie

CARATTERISTICHE
CARACTERISTIQUES

- Sistema indipendente con una o più colonne
- Sistema modulare
- Sistema combinabile con pompa - filtro
- Eliminati gli arresti del bagno nei cambi di resina
- Facile e veloce il cambio delle resine

- *Sysème indèpendant avec pompe et pré-filtre avec une ou plus colonnes*
- *Système modulaire*
- *Système combinable avec pompe-filtre*
- *Elimination des arrêts du bain durand le changement des résines*
- *Facilitation et rapidité du changement des résines*

la fonte srl.it

DISOIL

OIL SKIMMER

- La soluzione semplice, economica, funzionale e pulita dei problemi di inquinamento degli
  " OLII ESTRANEI IN SOSPENSIONE"

- *The easiest cheapest way to solve floating oil problem*
  " FLOATING FOREIGN OIL"

- COSTRUITO COMPLETAMENTE IN MATERIALE PLASTICO ANTIACIDO

- *RUGGED ANTIACID PLASTIC MATERIAL CONSTRUCTION*

CE

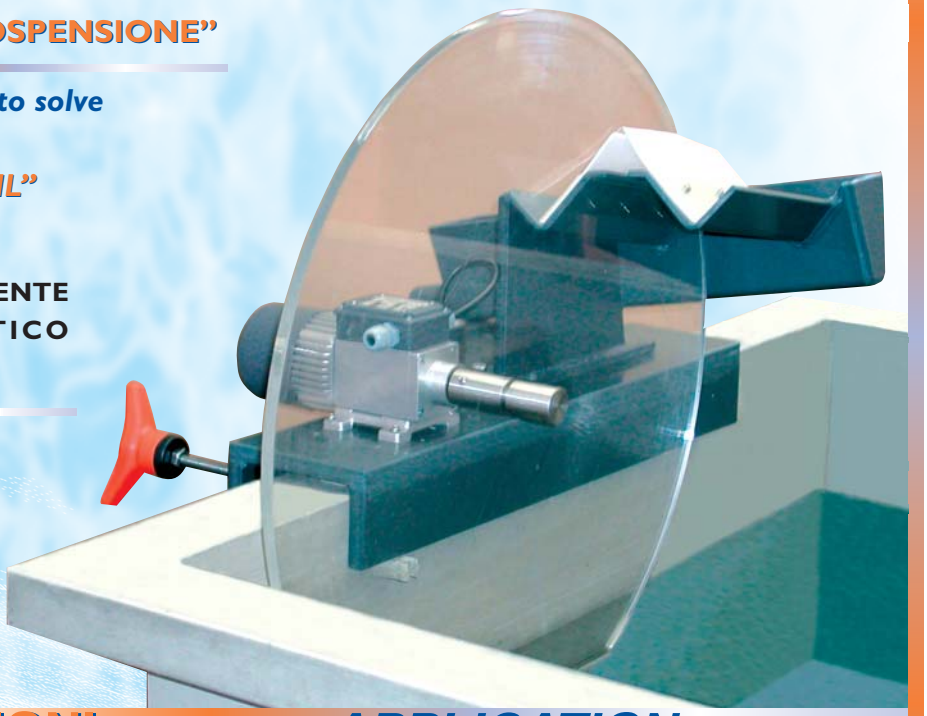

APPLICAZIONI

- Macchine utensili
- Trattamenti termici
- Trattamenti superficiali
- Settori dove è indispensabile l'eliminazione degli olii in sospensione

APPLICATION

- *Machines tools*
- *Heat treating*
- *Metal finishing*
- *Every where is necessary remove floating oil*

NON RICHIEDE ADDITIVI NON INTERROMPE I PROCESSI PRODUTTIVI

NO CHEMICAL ADDITIVES NO PRODUCTION PROCESS BREAK OFF

la fonte srl.it

DISOIL

OIL SKIMMER

FUNZIONAMENTO

L'olio aderisce al disco che ruota lentamente, quindi tramite degli appositi raschiaolio viene asportato e convogliato attraverso dei canali verso il recipiente di raccolta.
La quantità di olio asportato può variare da 2 a 15 litri ora in base al grado di viscosità dello stesso e dalle dimensioni dell'apparecchio.

OPERATION

Oil adheres to plastic rotating disc, then a proper oil scraper system remove in to apposite barrel.
Quantity of oil removed can change from 2 to 15 litres according with oil viscosity and dimension of machine.

DIMENSIONI

DIMENSION

DIMENSIONI / *OVERALL DIMENSION* (mm)			
MOD	D	A	C max
Disoil 300	300	110	80
Disoil 400	400	160	130
Disoil 600	600	240	200
Disoil 800	800	340	300
Altri			

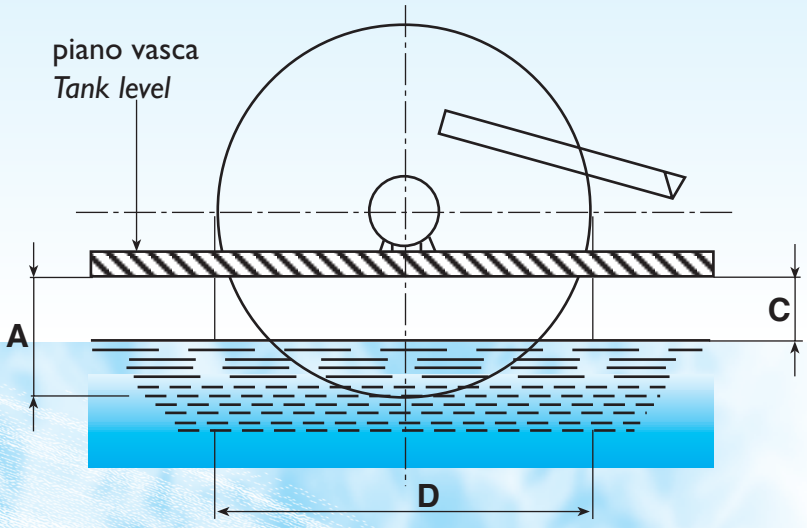

CE

CARATTERISTICHE TECNICHE - *TECHNICAL FEATURES*		Disoil 300/400	Disoil 600/800
Motore - *Motor*	WATT	6	9
	VOLT	230/1	230/1
Giri al minuto - *RPM*		4,2	3,1
Olio separato / *Removed oil*	l/h *	Lt. 4 ca	Lt. 12 ca

La capacità di olio recuperata è puramente indicativa in effetti tale volume dipende tra l'altro dalla viscosità e temperatura dell'olio.

*

Removed oil capacity is an indicative value it depends on several variable factors as viscosity and oil temperature.

lafonte.eu

IDRO RO 60-130

REVERSE OSMOSIS DEMINERALIZER

MAIN COMPONENTS	
Skid	Elegant fairing in glazed stainless steel (aisi 304) with strong base in stainless steel (aisi 304) tubular.
Pre-filtration	Cartridge with washable net, filtration 60 micron
De-chlorination	Activated charcoal cartridge containing approximately lt 3,5 of activated charcoal
Micrometrical filter	Filtering cartridge 5 micron
Antiscalant	Electronic proportional metering pump with membrane and tank for the preparation of antiscalant dosage solution.
Inlet	Solenoid electro-valve and safety switch
Pressurization	Volumetric pump with mono-phase motor 0,45 kw with thermal safety
Membranes	Wound Membranes in polyamide Diameter 2,5", length 40", minimum saline rejection 99,5%
Pressure vessels	In stainless steel
Pressure indicators	n. 2 pressure gauge in glycerine
Delivery indicators	n. 2 flowmeter for the delivery control: permeat outlet, concentrated discharge
Conductibility control	Digital electronic conductivity meter with adjustable alarm with functioning shut off for high conductibility (disconnectable)
Functioning control	Electric panel in elegant case in ABS containing control switchboard with digital conductivity meter. LCD panel back-illuminated, visual display unit of appropriate and specific messages with automatic stop in case of : - High level storage tank treated water - Low pressure inlet - High conductivity (disconnectable) - Motor overheating - Low antiscalant level - External inhibition (there's a specific inlet contact) - Eventual automatic filter during washing Cumulative outlet alarm. Intuitive menu that allows to select anytime n° 6 available languages (Italian – English – French – German – Spanish – Portuguese/Brazilian), the set-point conductivity and desact/activation block for high conductivity

LAFONTE.EU srl may modify data any time, without notice, in order to get product enhancement.

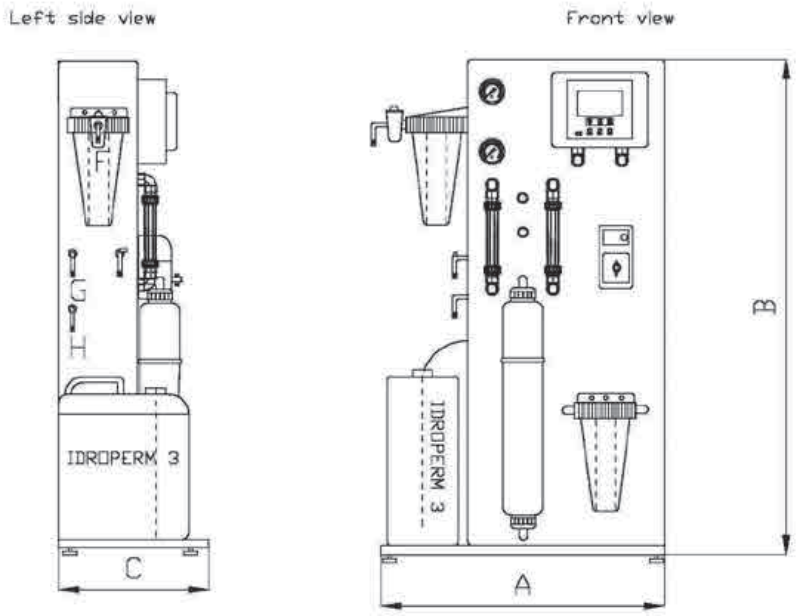

*Performances and technical characteristics**			
Model	Unit	**IR 60 St**	**IR 130 St**
Demineralized water delivery	lt/h	60	130
Water discharge delivery	lt/h	20 / 40	45 / 85
Water feeding delivery	lt/h	80 / 100	165 / 215
Recovery	%	75 / 60	75 / 60
Membrane's quantity	n°	1	2
Power installed pump	kw	0,5	0,5

* performances reported with feeding water with salinity 1500 ppm and temperature 15°C

Dimensional Parameter				
	Rif. draft	Unit	**IR 60 St**	**IR 130 St**
Width	A	mm	720	720
Height	B	mm	1250	1250
Depth	C	mm	380	380
Inlet diameter	F	mm/inches	17 o 3/8"	17 o 3/8"
Permeat outlet diameter	G	mm/inches	17 o 3/8"	17 o 3/8"
Discharge outlet diameter	H	mm/inches	17 o 3/8"	17 o 3/8"
Electric feeding	230 Vac - 50 Hz (available different tensions and various frequencies)			
Feeding compressed air	No			

ECO RO

REVERSE OSMOSIS DEMINERALIZER

ECONOMICO E AFFIDABILE

I demineralizzatori della serie ECO RO sono concepiti per produrre acqua demineralizzata con bassi costi di investimento e di esercizio. Il know how tecnico acquisito su grandi impianti operanti nelle più diverse condizioni e su medi impianti standard costruiti per svariate applicazioni (dal lavaggio industriale all'impiego ospedaliero) ha permesso la creazione di un impianto per basse portate estremamente semplice ed economico, senza per questo venir meno agli alti livelli di affidabilità.

DOTAZIONE COMPLETA

Gli apparati della famiglia eco ro sono realizzati su di una robusta ed elegante struttura in acciaio inox e prevedono:

- Pretrattamento completo
- Membrane osmosi inversa di marca primaria
- Indicatori di pressione
- Centralina elettronica con contatore, livelli elettrici, pressostati e sicurezze.

CONVENIENT AND RELIABLE

The ECO RO range is designed for the production of demineralized water with low investment and operating costs.
Idrotecnica has applied its technical know how from the production of large and medium sized systems for a wide range of applications (from industrial washing to hospitals) to create an extremely simple and economical, reliable product designed for low flow rates.

ALL THE KEY FEATURES

The ECO RO models are realized on a solid and elegant stainless steel structure. They provide:

- Complete pre-treatment
- Top-brand reverse osmosis membranes
- Pressure indicators
- An electronic control unit with counter, electrical, levels, pressure switches and security features.

ECONOMIQUE ET FIABLE

Les déminéralisateur série ECO RO sont étudiés pour la production d'eau déminéralisée avec basses coûts d'investissement et d'exploitation. Le savoir-faire technique, obtenu avec grandes équipements opérants dans situations les plus différentes et sur moyens appareils construites pour plusieurs champs d'application, a permis la création d'un appareil pour basses portées vraiment simple et économique, sans renoncer à une haute fiabilité.

EQUIPEMENT COMPLÈTE

Les appareils ECO RO sont réalisés sur une robuste et élégante structure en acier inoxydable et constitués de::

- Complet prétraitement
- Membranes à osmose inverse de grande marque
- Indicateurs de pression
- Module électronique avec computeur, niveaux électriques, pressostats et sécurités.

Modello / Model	Portata acqua trattata Delivery of treated water Débit eau traitée		Potenza installata Installed power Puissance installée	Dimensioni Dimensions Dimensions
	lt / h	mc / g	kw	cm
ECO RO 30 St	30	0,25	48 x 36 x 74	173 x 87 x 185
ECO RO 60 St	60	0,45	55 x 38 x 125	200 x 90 x 165
ECO RO 40 LE	40	0,25	48 x 36 x 74	240 x 100 x 165
ECO RO 80 LE	80	0,55	55 x 38 x 125	240 x 100 x 165

Prestazioni riferite ad acqua alimento con salinità 500 ppm temperatura 15° C.
Reiezione salina membrane: ECO RO St : 99,4 ± 99,5% - ECO RO LE : 98,0 ± 99,0%

Performances refer to the treatment of primary water with salinity 1500 ppm at temperature 15° C.
Salt rejection rate: ECO RO St : 99,4 ± 99,5% - ECO RO LE : 98,0 ± 99,0%

Performances référées à eau primarie avec salinité 500 ppm température 15° C.
Rejet saline mebranes: ECO RO St : 99,4 ± 99,5% - ECO RO LE : 98,0 ± 99,0%

LAFONTE.EU srl may modify data any time, without notice, in order to get product enhancement.

lafonte.eu

M SERIES

REVERSE OSMOSIS DEMINERALIZER

IL PRODOTTO

I demineralizzatori della serie M sono ideali per ottenere media-bassa quantità d'acqua demineralizzata di alta qualità a prezzi contenuti.
Le caratteristiche principali si possono riassumere in:

- Bassi costi di investimento
- Facilità di utilizzo
- Dimensioni contenute.

COSTRUZIONE E VERSIONI

Sono composti da una colonna in Polipropilene rinforzato, resistente alla pressione di 10 bar (per i modelli M4 1.5 bar) che contengono resine cationiche/anioniche selezionate con elevata capacità di scambio e che sono correttamente trattate e mescolate per ottenere acqua di elevata purezza.
Il conduttivimetro digitale legge in continuo la conducibilità dell'acqua prodotta, segnalando quindi l'esaurimento delle resine.

MANUTENZIONE

La resina può essere sostituita in due modi:

- sostituire la carica di resina fornita in sacchi
- sostituire la colonna con una di ricambio ed inviarla al nostro laboratorio per la rigenerazione.

CONVENIENT AND RELIABLE

M series demineralizers are ideal for the production of a mediumlow quantity of high-quality demineralized water at reasonable cost.
The principle characteristics are:

- Low investment cost
- Simple operation
- Compact size.

CONSTRUCTION AND VERSIONS

These demineralizers comprise a reinforced pressure-resistant (to 10 bar; 1.5 bar for the M4) polypropylene column containing cationic-anionic resins selected for their high exchange capacity and which are treated and combined in order to achieve hiht water purity.
The digital conductivity meter continuously meansures the conductivity of the produced water, providing advise about the depletion of the resins.

MAINTENANCE

Recharging of the resins can be done in two ways:

- replacement of the resins (supplied in bags)
- replacement of the column which is sent to our laboratory for regeneration.

DAS PRODUKT

Die Entmineralisierungsanlagen der Baureihe M sind ideal zum Erzeugen einer kleinen bis mittelgroßen Menge entmineralisierten Wassers hoher Qualität zu einem geringen Preis.
Die wichtigsten Eigenschaften sind:

- Diedrige Investitionskosten
- Benutzerfreundlichkeit
- Geringe Abmessungen.

BAUWEISE UND VESRIONEN

Sie bestehen aus einer Säule aus verstäktem Polypropylen mit einer Druckfestigkeit von 10 bar (fur die Modelle M4 1.5 bar) die ausgesuchte Kationen-bzw. Anionenaustauschharze mit hoher Austauschleistung enthalten, die eigens zum Erzielen von Reinstwasser behandelt und gemischt wurden. Der digitale Leitfähigkeitsmesser liest kontinuierlich die Leitfähigkeit des erzeugten Wassers ab und signalisiert so die Erschöpfung der Austauschharze.

WARTUNG

Das Austauschharz kann auf zweierlei Art ersetzt werden:

- Ersetzen der in Beuteln gelieferten Harzfullung
- Ersetzen der Säule durch eine Reservesaule aund Einsender der alten bei uns zum Regenerieren.

Model	Delivery	Cyclic yeld / lt.				Dimensions	
	lt / h	10° F	20°F	30°F	40°F	Ø	h
M4	100	1080	540	360	270	110	720
M9	180	1800	900	600	450	180	640
M12	240	2300	1150	800	580	180	770
M20	400	3900	1970	1300	980	180	1100
M30	600	5900	3000	2000	1500	203	1330
M50	1000	10200	5100	3400	2550	255	1330

Since 1975 processing Corrosive Solutions

lafonte.eu®

FILTER ELEMENTS and CONSUMABLES

lafonte.eu

PURE flow

HIGH FLOW FILTER ELEMENTS

INDUSTRY STANDARD DESIGNS

Pure Flow Filter Elements offer high solids loading with the convenience of a bag. CH elements are constructed of thermally bonded, absolute rated, high porosity, pure filter media free of surfactants, sizing or binding materials that can contaminate sensitive processes. Pure Flow Filter elements feature a 150 mm nominal diameter body configured in various lengths, end cap designs materials of construction.

Pure Flow Filter elements are constructed in a wide array of medias for exacting applications. Pure Flow standard MOC is all pure polypropylene with optional polyester, nylon and glass microfiber. The pleated media and support layers are thermally embedded in thermoplastic end caps to eliminate potential bypassing. Thermoplastic or metallic exterior cages protect the pleat uniformity ensuring even flow.

TECHNICAL FEATURES

- Inside-to-Out flow pattern retains all solids and particulates within the element to avoid residual contaminants during change-outs
- Outside-to-In flow pattern allow an higher furface area considering same filter housing dimension
- Absolute rated media consistently meets demanding requirements to protect critical processes
- Maximized surface area, porosity and depth meets high flow rates with many times the life over conventional bags or cartridges
- Thermally bonded pure polypropylene media is free of contaminants such as surfactants, sizing, potting adhesives or fibrous material
- High pressure differential ratings prevent overstressing and failure of media towards the end of a cycle
- Positive o-ring seal prevents by-passing of solids even in elevated temperatures

CARTRIDGE CODE IDENTIFICATION

SERIES	VERSION	END CAP STYLE		HIGHNESS (inch)	CORE MATERIAL	SUPPORT MATERIAL	CAPS MATERIAL	RATE (micron)	MEDIA	O-RINGS MATERIAL
		flow direction	model							
CH	High Efficiency: **6S**	OUT-IN	**A**-225 SOE	20	PP : **C**	PP : **C**	PP : **C**	05	PP: **P**	EPDM: **3**
				28				10		
				40				20		
WH	Absolute rate: **6H**	IN-OUT	**M**-625 SOE	40		POLYESTER : **E**		02		VITON: **6**
								05		
CH	**65**	**A**		**28**	**C**	**C**	**C**	**05**	**P**	**6**

COMMERCIAL BENEFITS

- Compact design minimizes installation costs and required plant area
- High efficiency purification extends chemistry life and production yields while protecting process equipment
- Extended intervals between replacements minimizes production downtime, and potential loss of usable chemistry
- Rapid element change-outs in only a few minutes
- High flow rates with low pressure drop reduces pump and motor HP and power consumption
- Light-weight, crushable, lower mass media material minimizes disposal costs
- Easy maintenance procedures reduce labor costs and potential exposure to hazardous chemicate

PLEATED ELEMENTS CHART		
Version	**6H**	**6S**
Efficiency	99,98%	98%
Equivalent micron rate	5	2
	10	5
	20	10
T max °C	70	
Start up Pressure (Bar)*	0,04 - 0,07	
Change out Pressure (Bar)*	0,7 - 1,8	
Max Differentia Pressure (Bar)**	3 - 6	

* Varies with micron rating, fluid properties and required flow rate
** Varies with process temperature

CCA

CARBON CARTRIDGE

APPLICAZIONI

Water Treatment
Chemical Filtration
Farma Filtration
Plating Filtration
Plating Filtration
Food & Beverages

CCA-I

Porous sinterized PP outer shell used as 20µm pre-filter houses, granular carbon vegetal origin and 3µm membrane on PP core – PP heads

CCA-S

Porous sinterized PE outer shell used as 50µm pre-filter houses, granular carbon vegetal origin and 3µm membrane on PP core – EPDM heads

Type	H	GR	Ø mm	l/min	Tmax °C
CCA-I	4″	50	70	3	75
	10″	250		7,5	
	20″	500		15	
Type	H	GR	Ø mm	l/min	Tmax °C
CCA-S	10″	200	70	7,5	65
	20″	400		15	
	30″	600		22,5	

LAFONTE.EU srl may modify data any time, without notice, in order to get product enhancement.

CCA

CARBON CARTRIDGE

APPLICAZIONI

Water Treatment
Chemical Filtration
Farma Filtration
Plating Filtration
Plating Filtration
Food & Beverages

CCA-V

Porous sinterized PP outer shell, granular carbon vegetal origin and 3µm membrane on PP core – PU heads.

CCA-B

Porous sinterized PP outer shell, granular carbon vegetal origin and 5µm membrane on PP core – PP heads

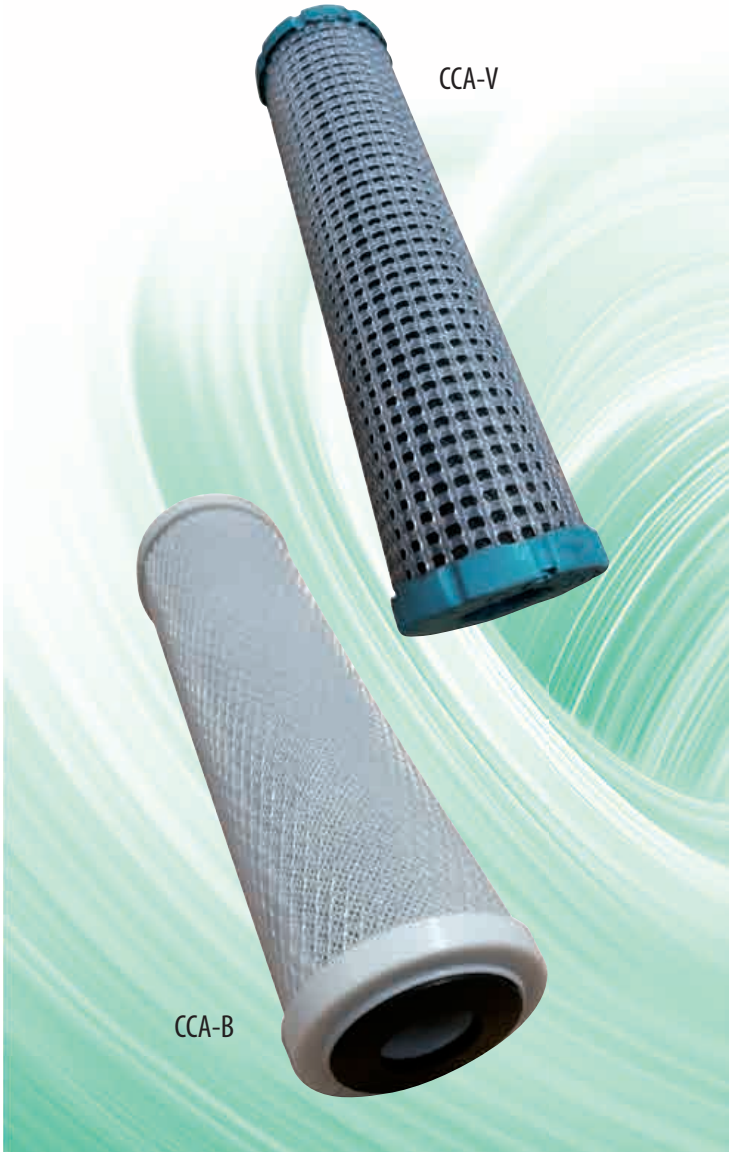

Type	H	GR	Ø mm	l/min	Tmax °C
CCA-V	10″	130	65	6	55
	20″	200		12	
Type	H	GR	Ø mm	l/min	Tmax °C
CCA-B	10	110	70	10	55
	20	220		20	

LAFONTE.EU srl may modify data any time, without notice, in order to get product enhancement.

CPP

STRING WOUND FILTER CARTRIDGES

CPP

CPP are produced wounding a yarn on an inner core made of PP or Stainless Steel. They represent the best quality price ratio on the market place for surfaces treatment applications, waste water treatments, industrial filtrations ...
CPP are manufactured of specially selected raw materials. Available in Polypropylene yarn, Cotton, Polyester, Nylon and Microglass fiber.
We can provide string wound cartriges with a range of nominal porosity from 1 micron up to 200 micron and in lengths from 4" to 40".

FEATURES

- Raw materials of High Quality
- High Flow/Low Pressure Drop Media
- Cost saving from long service filter life
- Wide Chemical Compatibility
- Various cartridge sealing options
- Available in standard diameter or BIG
- Inner core PP or SS3 04 3 1 6
- Removal ratings from 1 to 200 micron
- Single use filter

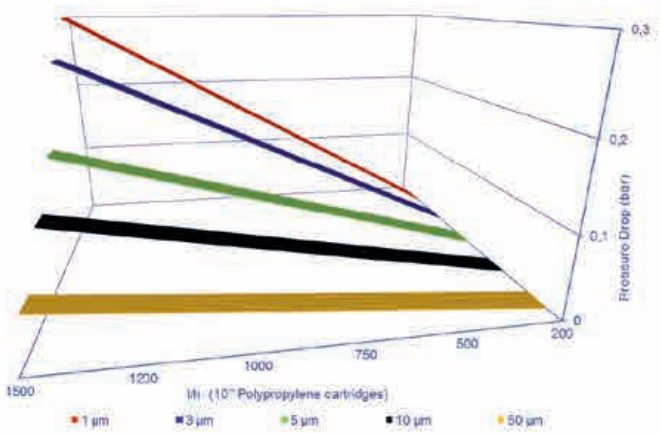

APPLICATIONS

- Waste Water Treatment
- Chemical Filtration
- Oils Filtration
- Plating Filtration
- Industrial Filtration
- Petrochemicals Filtration

Wound depth cartridge	Lenght	Filtration rate (micron)	Filter element	Core	Attack*
CPP	4" 10" 20" 30" 40"	01 = 1 05 = 5 10 = 10 20 = 20 50 = 50 100 = 100 200 = 200	P = PP V = Fiberglass Y = Polyester C = Cotton	P = PP I = SS F = PVDF	1 = DO2 2 = SOE 222 3 = SOE 226
CPP	10"	10	P	P	1

LAFONTE.EU srl may modify data any time, without notice, in order to get product enhancement.

* DOE = Double Open End
* SOE222 = Single Open End - Oring 222
* SOE226 = Single Open End - Oring 226

CMB

MELT BLOWN FILTER CARTRIDGES

CMB

The Melt Blown Filter Cartrigdes series CMB are manufactured with 100% of **Polypropylene** and are available with or without PP inner core. These kind of filter elements are produced in order to increase the yield of filtration. We can provide melt blown cartridges in length from 9"3/4 to 40" and with proposity fron 1 up to 100 micron. CMB cartridges are designed to have a continuosly gradient pore structure increases the capacity of dust. We have two series of melt blown Cartrigdes, the cartridges with absolute retention and the cartridges with nominal retention.

FEATURES

- Raw Materials of High Quality
- High Flow/Low Pressure Drop Media
- Free of binders and adhesives 100% CMB for wide chemical compatibility.
- Various Cartrigdes sealing options
- Available in standard diameter or BIG
- With or without CMB inner core
- Available in absolute retention or nominal Single-use Filter

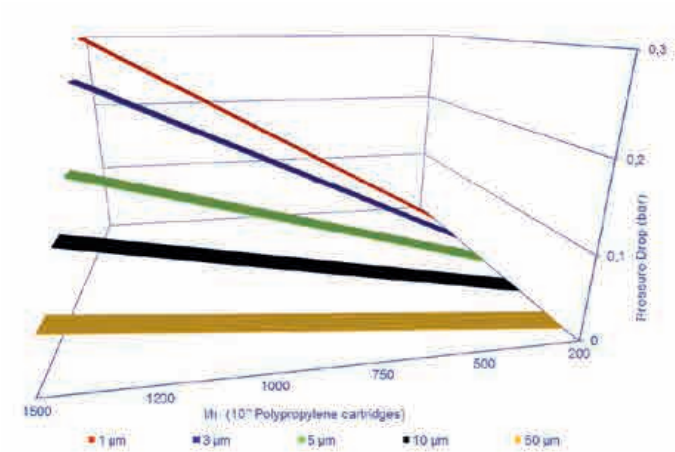

APPLICATIONS

- Waste Water Treatment
- Chemical Filtration
- Oils Filtration
- Plating Filtration
- Industrial Filtration
- Petrochemicals Filtration

Wound depth cartridge	Lenght	Filtration rate (micron)	Filter element	Core	Attack*
CMB	4" 10" 20" 30" 40"	01 = 1 05 = 5 10 = 10 20 = 20 50 = 50 100 = 100	P = PP	P = PP O = No core	1 = DO2 2 = SOE 222 3 = SOE 226
CMB	10"	10	P	P	1

LAFONTE.EU srl may modify data any time, without notice, in order to get product enhancement.

* DOE = Double Open End
* SOE222 = Single Open End - Oring 222
* SOE226 = Single Open End - Oring 226

lafonte.eu

BAG FILTER

COMPOSITE MATRIX BAGS

BAG FILTER

Composite Matrix Bags, Absolute Efficiency

Features

- Polypropylene microfiber matrix, exclusively FDA compliant
- Free from crater forming substances (i.e. Silicone)
- Non foaming
- Micron range: 0.2 μm - 50 μm
- High oil adsorbent capabilities, multilayer compound structure
- PP-collar or metal ring as bag sealings
- Broad chemical compatibilities
- Fiber migration & extractable free media treatment
- High flow rate, low pressure drop
- Recommended Flow rate: size 1 : 6 m³ / hr
size 2 : 12 m³ / hr
- Suggested Change-out pressure differential 0.12 MPa, max. 0.20 MPa (1.5 bar, max. 2.0 bar)
- 25 % less fluid media loss vs. bags of comparable size

Benefits

- **Easy Installation** – no tools required
- **Double Sealing** – plastic collars designed to provide additional safety against bypasses
- **Stable Material Composite** – both stable and flexible filter bags for better alignment to the restrainer basket
- **Available sizes** – standard sizes but also customized for an optimal process adaptation
- **Low Disposal Cost** – to further improve economics

Applications

- Automotive industry
- Water treatment
- Food and beverage
- Pharmaceutical industry
- Petro-chemical
- Fine chemicals
- Paints and varnishes
- Cutting and grinding oils
- Many others

Product category: **Absolute efficiency filter bag**

APM Polypropylene Multilayer compound structure

Technical Data

Sizes	Material	Seam Treatment	Length [mm]	Ø [mm]	Filter Area [m²]	Volume [l]	Housings e.g
size 1	PP Microfiber	welded	420	180	0.25	8.0	HEXB23, HTWB23
size 2	PP Microfiber	welded	820	180	0.50	17.5	HEXB45, HTWB45
size 3	PP Microfiber	welded	230	100	0.09	1.5	HEXB6, HTWB6
size 4	PP Microfiber	welded	380	100	0.15	2.5	HEXB10, HTWB10

Product Code

APM – 10 – WS – PLK 2

Filter Media:

APM : Polypropylene microfiber, multi-layer

Retention Rate absolute [µm @ >95% efficiency]:
0,2 ; 0,5 ; 1 ; 3 ; 5 ; 10 ; 25 ; 50

WS: welded seam

Bag Size: Ø * L [mm]:

1 : 180 * 420
2 : 180 * 820
3 : 100 * 230
4 : 100 * 380

Bag Sealing:

SS : Galvanized steel
PLK : PP collar

Other types on request

lafonte.eu

SFL

Filter Bag Elements

FEATURES

- FDA compliant
- Free from crater forming substances (i.e. silicone)
- Available as single and multi-layered bags with graded pore depth structure
- 1µm - 200 µm nominal retention rates
- PP or metal ring as bag sealing
- Excellent chemical compatibility
- Thermal surface treatment effectively minimizes fibre migration
- Recommended change out pressure differential 0.1 - 0.16 MPa (1.0 - 1.6 bar)

BENEFITS

- **Easy Installation** - no tool required
- **Double Sealing** - plastic collars designed to provide additional safety against bypassed
- **Stable Material Composite** - both stable and flexible filter bags for better alignment to the restrainer basket
- **Available Sizes** - all standard but also customized sizes for an optimal process adaptation
- **High Dirt Capacity** - to ensure a long lifetime
- **Low Disposal Cost** - to further improve economics

APPLICATIONS

- Automotive Industry
- Water Treatment
- Pharmaceutics
- Food and Beverage
- Chemical Industry
- Paints and Vamishes
- Many Others

Technical Data

Sizes	Filter Material	Lenght (mm)	Ø (mm)	Filter Area (m^2)	Volume (l)
size 1	PP, PE	420	180	0,25	8,0
size 2	PP, PE	820	180	0,50	17,5
size 3	PP, PE	230	100	0,09	1,5
size 4	PP, PE	380	100	0,15	2,5
size 5	PP, PE	510	150	0,25	8,0

Model	Retention rate nominal	Filter Material	Size	Bag Sealing Colair/Ring
SFL	1 = **001** 5 = **005** 10 = **010** 25 = **025** 50 = **050** 100 = **100** 200 = **200**	Felt PP = **P** Nylon = **Y** PP Monofilament = **M** PTFE = **T**	1 2 3 4 5	PP = **P** Coated steel = **X**
SFL	**010**	**M**	**2**	**P**

LAFONTE.EU may modify data any time, without notice, in order to get product enhancement

DFC

Carte Filtro Cellulosa
Filter Papers

CARTE FILTRO IN CELLULOSA

Carte filtro realizzate con cellulose nobili con aggiunta di linters di cotone idonee alle richieste di settori industriali quali galvanio, chimico e farmaceutico.
I vari prodotti rispondono inoltre ai requisiti d'idoneità al contatto con alimenti.
Disponibili nei formati di cui sotto e a richiesta con quantitativi minimi.

FILTER PAPERS

Filter papers are made exclusively of pure cellulose with high alpha content.
Cotton linters are also added, particularly suitable for electroplating , checmical and pharmaceutical industries.
All range meets also requirements of food contact suitability
Always Available with sizes hereunder specified, other sizes on demand according with minimum quantity.

Formati Standard *Standard sizes* De/Di - *OD/ID* mm	Tipo *Type*	Q.tà per conf. *Q.ty each pack*	Codice *Code*
130/32	IF 250	100	DFC130X250
	Carbon	100	DFC130
150/32	IF350	100	DFC150X350
	Carbon	100	DFC150
195/60	IFC90	200	DFC195X90C
	IF250	100	DFC195X250
	IF350	100	DFC195X350
	Carbon	100	DFC195
205/32	IFC90	200	DFC205X90C
	IF250	100	DFC205X250
	IF350	100	DFC205X350
	Carbon	100	DFC205
256/50	IFC90	200	DFC256X90C
	IF250	100	DFC256X250
	IF350	100	DFC256X350
	Carbon	100	DFC256
260/40	IFC90	200	DFC260X90C
	IF250	100	DFC260X250
	IF350	100	DFC260X350
	Carbon	100	DFC260
295/50	IFC90	200	DFC295X90C
	IF250	100	DFC295X250
	IF350	100	DFC295X350
	Carbon	100	DFC295
350/60	IFC90	200	DFC350X90C
	IF350	100	DFC350X350
	Carbon	100	DFC350
460/100	IFC90	200	DFC460X90C
	IF350	100	DFC460X350
	Carbon	100	DFC460
470/60	IFC90	200	DFC470X90C
	IF350	100	DFC470X350
	Carbon	100	DFC470

Altri formati disponibili su richiesta - *Other sizes available on demand*

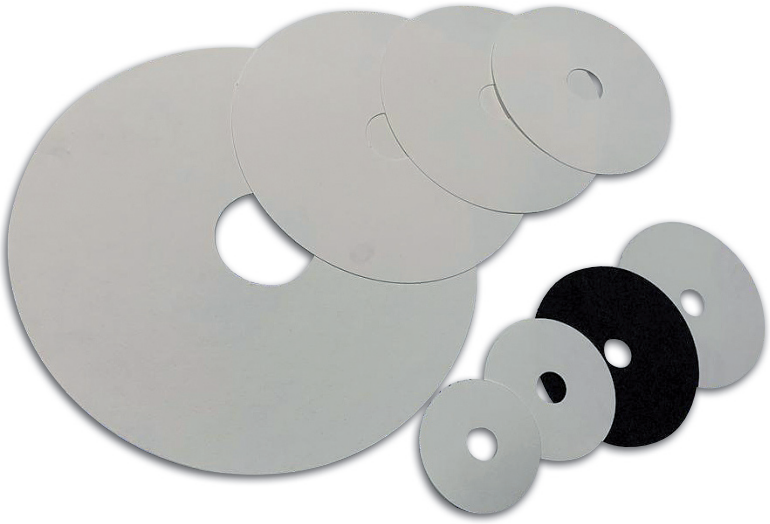

Caratteristiche *Properties*	Unità di misura *Unit of Measure*	IFC 90	IF 250	IF 350	Carbone
Grammatura *Basis weight*	g/m2	90	250	350	170
Spessore Thickness	mm	330	0,61	0,81	0,51
Densità Apparente *Apparent density*	g/m3	0,27	0,41	0,43	0,33

WP

Pleated and Cylindrical Stainless Steel Filter Cartridges
Stainless Steel 304 - Stainless Steel 316

Features

- Raw Materials of High Quality
- High Flow/Low Pressure Drop Media
- Available with inner support
- Pleated or cylindrical construction
- High mechanical strength
- High temperature resistance
- Excellent chemical compatibility
- Rating available from 5 to 100 micron
- Cleanable

Applications

- Water treatment
- Petrochemical Filtration
- Desalination
- Chemical Filtration
- Resins and Paints
- Hydraulic
- Power generation
- General industry

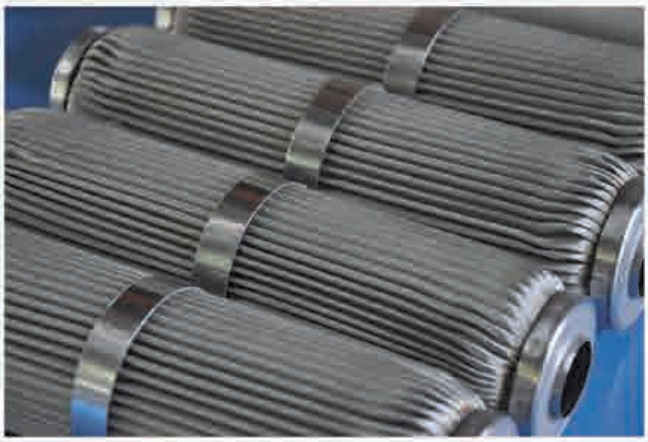

	Cylindrical			Pleated		
Micron	1 cP	25 cP	70 cP	1 cP	25 cP	70 cP
10	1600	500	300	1800	600	400
25	2000	1100	850	2500	1500	1250
45	2500	1400	1200	2500	1600	1400
75	2500	1800	1600	2500	1800	1600
100	2500	1800	1600	3000	1800	1600
150	3000	2100	1900	3000	1800	1600
>250	3000	2100	1900	3000	2000	1800

l/h - Flow rate of water at 20°C - 10"
The data are informative and subject to change without notice

Lenght Available	
10"	30"
20"	40"

Dimensions	
Ø Outer	68 mm
Ø Inner	27 mm

Gaskets / Temp.	
Viton	230°C
PTFE	250°C
Silicone	230°C
Buna-n	120°C

Max Working Temp.	
Crimped	300°C
Epoxy G.	120°C

Max Delta-P allowable	
Crimped	6 bar - 25°C
Epoxy G.	4 bar - 25°C

Replacement cartridge at Delta-P 2.0 bar

Filtration Area (10")	
Cylindrical	0.05 m²
Pleated	0.18 m²

Wire Mesh Available
Square Mesh
Reps Mesh
PZ Mesh

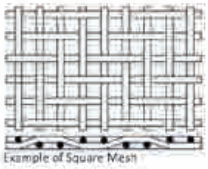

Example of Square Mesh

lafonte™.eu

Jumbo

HIGH FLOW FILTER ELEMENTS

Features:

- Made completely from PP
- Available in different sizes and highness
- Avaliable filtration rates 3-10-30 micron
- Filter area of each single elements from 1,5 to 8 m2
- Cartrigdes sealing by double O-Ring
- Washable and reusable up to 10 times

Advantages:

- Inert to most of acid and alkaline chemical products
- It permit to be hold in several filter chambers
- Guarantee of quality of filtered product, suitable for different type of filter baths
- High flow, low pressure losseds, high retention holding capability
- Peferct sealing , zero flow by pass
- Low cost

Applicazioni:

- Plating baths
- Degreasing baths
- Rinsing baths

Available in different sizes

CARTRIDGES CODE						
SERIES	MATERIAL	HEIGHT	DIAMETER mm	FILTRATION RATE	O-RING MATERIAL	A m^2
JB	P= PP	1=10″ 2=20″ 3=30″	A= D150	03=3micron 10=10micron 30=30micron	E= EPDM V= Viton	1,5 3 4,5
JB	P= PP	1=10″ 2=20″	B=200	03=3micron 10=10micron 30=30micron	E= EPDM V= Viton	2,5 5
JB	P= PP	1=10″ 2=20″	C=250	03=3micron 10=10micron 30=30micron	E= EPDM V= Viton	4 8

Since 1975 processing Corrosive Solutions

lafonte.eu®

ACCESSORIES

Since 1975 processing Corrosive Solutions

GRIGLIATI

LAYOUT E DIMENSIONI

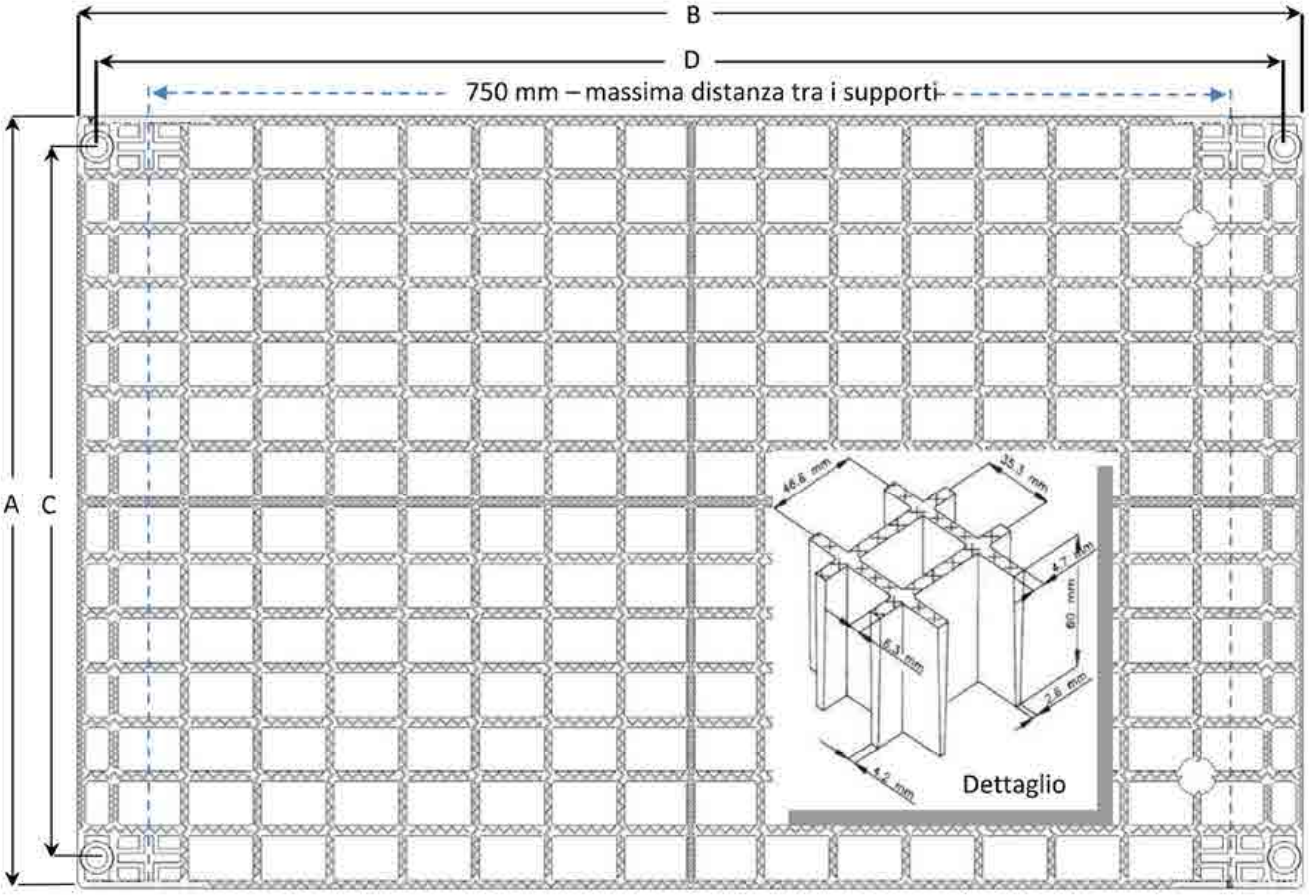

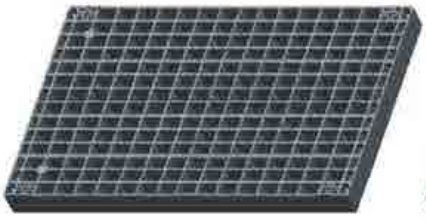

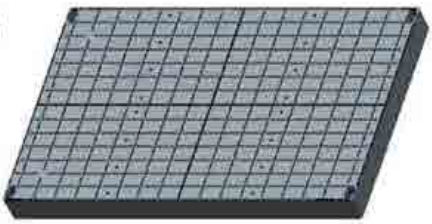

Grigliato NERO	Grigliato GRIGIO	Grigliato STEP-GRADINO
✓ Peso 5,4 Kg	✓ Peso 6,9 kg	✓ Peso 3 Kg

Tipo Griglia	A	B	C	D	Altezza
NERO	505 mm	800 mm	465 mm	775 mm	60 mm
GRIGIO	508 mm	805 mm	465 mm	780 mm	60 mm
STEP-GRADINO	280 mm	752 mm	242 mm	714 mm	60 mm

EQX 51

AUTOMATIC PULSATION DAMPERS

MADE IN ITALY

- Product designed and constructed in Italy
- Operates with non-lubricated air
- High performance and strength
- Suitable for minimising pulsating flows
- Suitable for minimising vibrations during the operation of the pump

ex. EQ100PCHTC
EQX 100 PP+CF, Hytrel®, air side diaphragm, PTFE product side diaphragm, conduct.

EQ100	PC	H	T	C
DAMPER CASING	DAMPER CASING	AIR-SIDE DIAPHRAGM	PRODUCT-SIDE DIAPHRAGM	CONDUCT VERSION
EQ 51 - EQX 51 **EQ 100** - EQF 100 **EQ 200** - EQX 200 **EQ 302** - EQX 302 **EQ 303** - EQX 303	**P** - Polypropylene **FC** - PVDF+CF **R** - PPS-V **A** - AISI 316 (excluded EQ 303) **AL** - Aluminium **PC** - PP + CF	**H** - Hytrel® **M** - Santoprene® **D** - EPDM **N** - NBR	**T** - PTFE	(zone 1) II 2/2GD c IIB T135°C **C** - on request

The EQX dampers are used with fluids with a high apparent viscosity, also with large suspended solids. They adapt automatically to the system conditions, without any manual adjustments or calibrations. **The high capacity of minimising pulsations, vibrations and water hammer renders this component ideal for protecting the system, providing a regular outlet flow**.

EQX 51

AUTOMATIC PULSATION DAMPERS

Specifications and types

STANDARD: II 3G Ex h IIB T4 Gc, II 3D Ex h IIIB T135°C Dc (zone 2)
CONDUCT: II 2G Ex h Iib T4 Gb, II 2D Ex h IIIB T135°C Db (zone 1)

Fitting Product	Air fitting	Operating pressure	Application	Material* (half-casing in contact with the fluid)	Weight	Operating time	Dim. (mm)
G 3/4"	Ø 6 mm	Min 2 Bar - Max 8 Bar	Midgetbox, Cubic15 Boxer7, Boxer15 Microboxer, Boxer35	Polypropylene	0.5 Kg	from +3°C to +65°C	121x117
G 3/4"	Ø 6 mm	Min 2 Bar - Max 8 Bar	Midgetbox, Cubic15 Boxer7, Boxer15 Microboxer, Boxer35	PP + CF	0.5 Kg	from +3°C to +65°C	121x117
G 3/4"	Ø 6 mm	Min 2 Bar - Max 8 Bar	Cubic15, Boxer7, Boxer15 Microboxer, Boxer35	PVDF	0.5 Kg	from +3°C to +95°C	121x117
G 3/4"	Ø 6 mm	Min 2 Bar - Max 8 Bar	Boxer7, Boxer15 Microboxer, Boxer35	PPS	0.6 Kg	from +3°C to +95°C	121x117
G 1/2"	Ø 6 mm	Min 2 Bar - Max 8 Bar	Boxer7, Boxer15 Microboxer, Boxer35	AISI 316 L	1.33 Kg	from +3°C to +95°C	133x117

*Material on request: • UHMWPE • POMc • DUPLEX/S.DUPLEX

AIR SIDE HALF-CASING MATERIAL

- PP
- PP+CF
- ALUMINIUM

DIAPHRAGM MATERIALS

- NBR
- EPDM
- Hytrel
- Santoprene
- PTFE

CAPS MATERIALS

- Polypropylene (with glass additive)
- Conductive polypropylene (with carbon additive)
- PVDF
- PPS
- Natural ECTFE
- AISI 316 L

PACKAGE

cardboard box
cm 14 x 19 x 14
weight 0.17 Kg

(the weight refers to the package only, without the pump)

EQX 100 AUTOMATIC

PULSATION DAMPERS

- Product designed and constructed in Italy
- Operates with non-lubricated air
- High performance and strength
- Suitable for minimising pulsating flows
- Suitable for minimising vibrations during the operation of the pump

EQX 100 PP+CF, Hytrel®, air side diaphragm, PTFE product side diaphragm, conduct.

EQ100	PC	H	T	C
DAMPER CASING	DAMPER CASING	AIR-SIDE DIAPHRAGM	PRODUCT-SIDE DIAPHRAGM	CONDUCT VERSION
EQ 51 - EQX 51 **EQ** **100** - EQX 100 **EQ** **200** - EQX 200 **EQ** **302** - EQX 302 **EQ** **303** - EQX 303	**P** - Polypropylene **FC** - PVDF+CF **R** - PPS-V **A** - AISI 316 (excluded EQ 303) **AL** - Aluminium **PC** - PP + CF	**H** - Hytrel® **M** - Santoprene® **D** - EPDM **N** - NBR	**T** - PTFE	(zone 1) II 2/2GD c IIB T135°C **C** - on request

The EQX dampers are used with fluids with a high apparent viscosity, also with large suspended solids. They adapt automatically to the system conditions, without any manual adjustments or calibrations. **The high capacity of minimising pulsations, vibrations and water hammer renders this component ideal for protecting the system, providing a regular outlet flow**.

EQX 100

AUTOMATIC PULSATION DAMPERS

Specifications and types

STANDARD: II 3G Ex h IIB T4 Gc, II 3D Ex h IIIB T135°C Dc (zone 2)
CONDUCT: II 2G Ex h Iib T4 Gb, II 2D Ex h IIIB T135°C Db (zone 1)

Fitting Product	Air fitting	Operating pressure	Application	Material* (half-casing in contact with the fluid)	Weight	Operating time	Dim. (mm)
G 1"	Ø 6 mm	Min 2 Bar - Max 8 Bar	Boxer50, Boxer81	Polypropylene	1.5 Kg	from +3°C to +65°	C177x170
G 1"	Ø 6 mm	Min 2 Bar - Max 8 Bar	Boxer50, Boxer81	PP+CF	1.5 Kg	from +3°C to +65°	C177x170
G 1"	Ø 6 mm	Min 2 Bar - Max 8 Bar	Boxer50, Boxer81	PVDF	1.7 Kg	from +3°C to +95°	C177x170
G 1"	Ø 6 mm	Min 2 Bar - Max 8 Bar	Boxer50, Boxer90	PPS	1.7 Kg	from +3°C to +95°	C177x170
G 1"	Ø 6 mm	Min 2 Bar - Max 8 Bar	Miniboxer, Boxer81	AISI 316 steel AISI 316 steel	2.56 Kg	from +3°C to +95°	C183.2x151

*Material on request: • UHMWPE • POMc • DUPLEX/S.DUPLEX

AIR SIDE HALF-CASING MATERIAL

- PP
- PP+CF

DIAPHRAGM MATERIALS

- NBR
- EPDM
- Hytrel
- Santoprene
- PTFE

CAPS MATERIALS

- Polypropylene (with glass additive)
- Conductive polypropylene (with carbon additive)
- PVDF
- PPS
- Natural ECTFE
- AISI 316 L

PACKAGE

cardboard box
cm 19 x 19 x 21
weight 0.5 Kg

(the weight refers to the package only, without the pump)

EQX 200 AUTOMATIC

PULSATION DAMPERS

MADE IN ITALY

- Product designed and constructed in Italy
- Operates with non-lubricated air
- High performance and strength
- Suitable for minimising pulsating flows
- Suitable for minimising vibrations during the operation of the pump

EQX DAMPERS CODES ENCODING

ex.: EQ100PCHTC
EQX 100 PP+CF, Hytrel®, air side diaphragm, PTFE product side diaphragm, conduct.

EQ100	PC	H	T	C
DAMPER CASING	DAMPER CASING	AIR-SIDE DIAPHRAGM	PRODUCT-SIDE DIAPHRAGM	CONDUCT VERSION
EQ 51 - EQX 51 **EQ 100** - EQX 100 **EQ 200** - EQX 200 **EQ 302** - EQX 302 **EQ 303** - EQX 303	**P** - Polypropylene **FC** - PVDF+CF **R** - PPS-V **A** - AISI 316 (excluded EQ 303) **AL** - Aluminium **PC** - PP + CF	**H** - Hytrel® **M** - Santoprene® **D** - EPDM **N** - NBR	**T** - PTFE	(zone 1) II 2/2GD c IIB T135°C **C** - on request

The EQX dampers are used with fluids with a high apparent viscosity, also with large suspended solids. They adapt automatically to the system conditions, without any manual adjustments or calibrations. **The high capacity of minimising pulsations, vibrations and water hammer renders this component ideal for protecting the system, providing a regular outlet flow**.

EQX 200 AUTOMATIC

PULSATION DAMPERS

Specifications and types

STANDARD: II 3G Ex h IIB T4 Gc, II 3D Ex h IIIB T135°C Dc (zone 2)
CONDUCT: II 2G Ex h Iib T4 Gb, II 2D Ex h IIIB T135°C Db (zone 1)

Fitting Product	Air fitting	Operating pressure	Application	Material* (half-casing in contact with the fluid)	Weight	Operating time	Dim. (mm)
G 1"1/2	Ø 6 mm	Min 2 Bar - Max 8 Bar	Boxer100, Boxer150 Boxer251	Polypropylene	3.8 Kg	from +3°C to +65°C	283.2x254
G 1"1/2	Ø 6 mm	Min 2 Bar - Max 8 Bar	Boxer100, Boxer150 Boxer251	PP+CF	3.8 Kg	from +3°C to +65°C	283.2x254
G 1"1/2	Ø 6 mm	Min 2 Bar - Max 8 Bar	Boxer100, Boxer150 Boxer251	PVDF	4.5 Kg	from +3°C to +95°C	283.2x254
G 1"1/2	Ø 6 mm	Min 2 Bar - Max 8 Bar	Boxer100, Boxer150 Boxer251	PPS-V	4.5 Kg	from +3°C to +95°C	283.2x254
G 1"1/2	Ø 6 mm	Min 2 Bar - Max 8 Bar	Boxer100, Boxer150 Boxer252	AISI 316 steel AISI 316 steel	7.45 Kg	from +3°C to +95°C	264.7x254

*Material on request: • UHMWPE • POMc • DUPLEX/S.DUPLEX

AIR SIDE HALF-CASING MATERIAL

- PP
- PP+CF

DIAPHRAGM MATERIALS

- NBR
- EPDM
- Hytrel
- Santoprene
- PTFE

CAPS MATERIALS

- Polypropylene (with glass additive)
- Conductive polypropylene (with carbon additive)
- PVDF
- Natural ECTFE
- AISI 316 L
- Aluminium

PACKAGE

cardboard box
cm 27 x 27 x 31
weight 0.6 Kg

(the weight refers to the package only, without the pump)

EQX 302 AUTOMATIC

PULSATION DAMPERS

MADE IN ITALY

- Product designed and constructed in Italy
- Operates with non-lubricated air
- High performance and strength
- Suitable for minimising pulsating flows
- Suitable for minimising vibrations during the operation of the pump

EQX DAMPERS CODES ENCODING

ex. EQ100 PCHTC
EQX 100 PP+CF, Hytrel®, air side diaphragm, PTFE product side diaphragm, conduct.

EQ100	PC	H	T	C
DAMPER CASING	DAMPER CASING	AIR-SIDE DIAPHRAGM	PRODUCT-SIDE DIAPHRAGM	CONDUCT VERSION
EQ 51 - EQX 51 **EQ 100** - EQX 100 **EQ 200** - EQX 200 **EQ 302** - EQX 302 **EQ 303** - EQX 303	**P** - Polypropylene **FC** - PVDF+CF **R** - PPS-V **A** - AISI 316 (excluded EQ 303) **AL** - Aluminium **PC** - PP + CF	**H** - Hytrel® **M** - Santoprene® **D** - EPDM **N** - NBR	**T** - PTFE	(zone 1) II 2/2GD c IIB T135°C **C** - on request

The EQX dampers are used with fluids with a high apparent viscosity, also with large suspended solids. They adapt automatically to the system conditions, without any manual adjustments or calibrations. **The high capacity of minimising pulsations, vibrations and water hammer renders this component ideal for protecting the system, providing a regular outlet flow**.

EQX 302

AUTOMATIC PULSATION DAMPERS

Specifications and types

STANDARD: II 3G Ex h IIB T4 Gc, II 3D Ex h IIIB T135°C Dc (zone 2)
CONDUCT: II 2G Ex h Iib T4 Gb, II 2D Ex h IIIB T135°C Db (zone 1)

Fitting Product	Air fitting	Operating pressure	Application	Material* (half-casing in contact with the fluid)	Weight	Operating time	Dim. (mm)
G 2"	Ø 8 mm	Min 2 Bar - Max 8 Bar	Boxer522	Polypropylene	23 Kg	from +3°C to +65°C	398x516
G 2"	Ø 8 mm	Min 2 Bar - Max 8 Bar	Boxer522	PP + CF	23 Kg	from +3°C to +65°C	398x516
G 2"	Ø 8 mm	Min 2 Bar - Max 8 Bar	Boxer522	PVDF	28.5 Kg	from +3°C to +95°C	398x516
G 2"	Ø 8 mm	Min 2 Bar - Max 8 Bar	Boxer502	ALU	26 Kg	from +3°C to +95°C	356x352
G 2"	Ø 8 mm	Min 2 Bar - Max 8 Bar	Boxer502	AISI 316 steel AISI 316 steel	32 Kg	from +3°C to +95°C	356x352

*Material on request: • DUPLEX/S.DUPLEX

AIR SIDE HALF-CASING MATERIAL

- Central boxer 502/503 (PP)

DIAPHRAGM MATERIALS

- NBR
- EPDM
- Hytrel
- Santoprene
- PTFE

CAPS MATERIALS

- Polypropylene (with glass additive)
- Conductive polypropylene (with carbon additive)
- PVDF
- Aluminium
- AISI 316 L

PACKAGE

wooden crate
cm 62 x 44 x 57
weight 14 Kg

(the weight refers to the package only, without the pump)

EQX 303 AUTOMATIC

PULSATION DAMPERS

MADE IN ITALY

- Product designed and constructed in Italy
- Operates with non-lubricated air
- High performance and strength
- Suitable for minimising pulsating flows
- Suitable for minimising vibrations during the operation of the pump

EQX DAMPERS CODES ENCODIN

ex. EQ100PCHTC
EQX 100 PP+CF, Hytrel®, air side diaphragm, PTFE product side diaphragm, conduct.

EQ100	PC	H	T	C
DAMPER CASING	DAMPER CASING	AIR-SIDE DIAPHRAGM	PRODUCT-SIDE DIAPHRAGM	CONDUCT VERSION
EQ 51 - EQX 51 **EQ 100** - EQX 100 **EQ 200** - EQX 200 **EQ 302** - EQX 302 **EQ 303** - EQX 303	**P** - Polypropylene **FC** - PVDF+CF **R** - PPS-V **A** - AISI 316 (excluded EQ 303) **AL** - Aluminium **PC** - PP + CF	**H** - Hytrel® **M** - Santoprene® **D** - EPDM **N** - NBR	**T** - PTFE	(zone 1) II 2/2GD c IIB T135°C **C** - on request

The EQX dampers are used with fluids with a high apparent viscosity, also with large suspended solids. They adapt automatically to the system conditions, without any manual adjustments or calibrations. **The high capacity of minimising pulsations, vibrations and water hammer renders this component ideal for protecting the system, providing a regular outlet flow**.

EQX 303

AUTOMATIC PULSATION DAMPERS

Specifications and types

STANDARD: II 3G Ex h IIB T4 Gc, II 3D Ex h IIIB T135°C Dc (zone 2)
CONDUCT: II 2G Ex h Iib T4 Gb, II 2D Ex h IIIB T135°C Db (zone 1)

Fitting Product	Air fitting	Operating pressure	Application	Material* (half-casing in contact with the fluid)	Weight	Operating time	Dim. (mm)
G 3"	Ø 8 mm	Min 2 Bar - Max 8 Bar	Boxer503	Polypropylene	23 Kg	from +3°C to +65°C	398x516
G 3"	Ø 8 mm	Min 2 Bar - Max 8 Bar	Boxer503	PP + CF	23 Kg	from +3°C to +65°C	398x516
G 3"	Ø 8 mm	Min 2 Bar - Max 8 Bar	Boxer503	PVDF	28.5 Kg	from +3°C to +95°C	398x516
G 3"	Ø 8 mm	Min 2 Bar - Max 8 Bar	Boxer503	ALU	29 Kg	from +3°C to +95°C	356X352

*Material on request: • DUPLEX/S.DUPLEX

AIR SIDE HALF-CASING MATERIAL

- Central boxer 502/503 (PP)

DIAPHRAGM MATERIALS

- NBR
- EPDM
- Hytrel
- Santoprene
- PTFE

CAPS MATERIALS

- Polypropylene (with glass additive)
- Conductive polypropylene (with carbon additive)
- PVDF
- Aluminium
- AISI 316 L

PACKAGE

wooden crate
cm 62 x 44 x 57
weight 14 Kg

(the weight refers to the package only, without the pump)

Since 1975 processing Corrosive Solutions

P.le Cocchi, 2
21040 Vedano Olona (VA) Italy
Tel. +39 0332 402168
Fax +39 0332 402169
info@lafonte.eu
www.lafonte.eu